CONTENTS

Specifications 2
Coding Guide 3
Unit Layout 4
Setup & Disassembly Procedures 5
Printed Circuit Board, Circuit Board Diagram, Interconnection Diagram, Circuit Board Wiring
1. G7 Circuit Board Diagram, Interconnection Diagram 6
G7 Circuit Board Drawing 7
2. G2 – G6 Circuit Board Diagram, Interconnection Diagram 8
G2 – G6 Circuit Board Wiring 9
3. G1 Circuit Board Diagram, Interconnection Diagram 10
G1 Circuit Board Wiring 11
4. D3 Circuit Board Diagram, Interconnection Diagram 12
D3 Circuit Board Wiring 13
5. D2 Circuit Board Diagram, Interconnection Diagram 14
D2 Circuit Board Drawing 15
6. D1Dircuit Board Diagram, Interconnection Diagram 16
D1 Circuit Board Wiring 17
7. F Circuit Board Diagram, Interconnection Diagram 18
F Circuit Board Wiring 19
8. A Circuit Board Diagram, Interconnection Diagram 20
A Circuit Board Wiring 21
9. C1 Circuit Board Diagram, Interconnection Diagram 22
C1 Circuit Board Wiring 23
10. C2 Circuit Board Diagram, Interconnection Diagram 24
C2 Circuit Board Wiring 25
11. DC Circuit Board Diagram, Interconnection Diagram 26
DC Circuit Board Wiring 27
12. T1,T2 Circuit Board Diagram, Interconnection Diagram 28
CP-30 Parts List

SPECIFICATIONS

1. KEYBOARD	76 KEYS ($E_1 \sim G_7$)	6 OCTAVES 1/4
2. TONE TABLETS	I ch: PIANO 1, PIANO 2, PIANO 3, HARPSICHORD	II ch: PIANO 1, PIANO 2, PIANO 3, HARPSICHORD
3. EFFECT TABLETS	TREMOLO I	TREMOLO II
4. EFFECT CONTROL	PITCH I	PITCH II
	DECAY I	DECAY II
	SPEED (TREMOLO)	INTENSITY (TREMOLO)
	BASS	TREBLE
	BALANCE	VOLUME
5. FOOT SWITCH JACKS	SUSTAIN	
	TREMOLO	
6. OUTPUT JACKS	I	
	II	
	I + II	
7. OTHERS	POWER SW	
	PILOT LAMP	
8. INTERGRATED CIRCUITS	YM252 7	
	YM253 7	
	CA3038 1	
	RC4558 2	
9. RATED VOLTAGE	AC 110V ～ 240V	
10. RATED FREQUENCY	50/60Hz	
11. RATED POWER CONSUMPTION	25W (Other models) 117V 0.4A (Canadian model)	
12. APPEARANCE AND FINISHING	PICK BOLT	
	ROSE TAP PLYWOOD + PVC LEATHER CLAD	
	WIDTH 1276 mm	
	DEPTH 641 mm	
	HEIGHT 790 mm (UNPACKED), 181 mm (PACKED)	
	WEIGHT 54 kg	

CODING GUIDE

1. Designation of Signal Systems in Circuits

Audio Signal

DC Control Voltage

Modulated Wave

Pulse

Mechanical Control

2. Printed Circuit Board

1. All figures of the circuit board pattern are viewed from the part side.
2. Part displaying marks on the figures of the circuit board patterns.

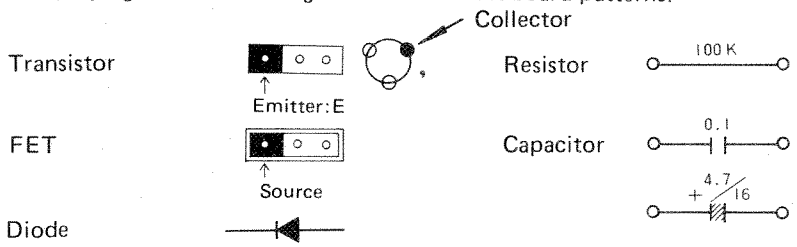

3. Designation of Wiring Materials

1. Color Designation (only English letters are shown in patterns)

BL (Black)	WH (White)
BR (Brown)	GG (Grass Green)
RE (Red)	SB (Sky Blue)
OR (Orange)	PK (Pink)
YE (Yellow)	TR(Transparent)
GR (Green)	J (Jumper)
BE (Blue)	
VI (Violet)	
GY (Gray)	

2. Designation of Wiring materials

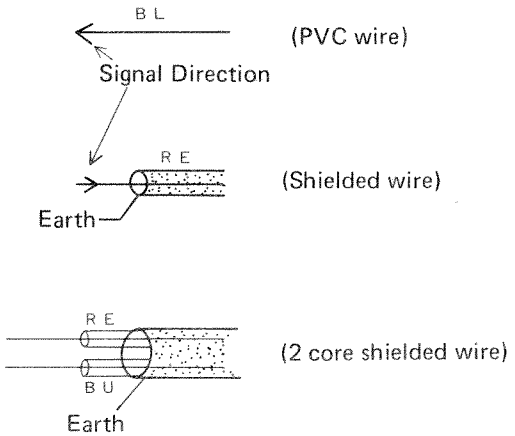

4. CP-30 consists of sound compassing E_1 – G_7 (76 keys) with A_4 = 440 (Hz).

UNIT LAYOUT

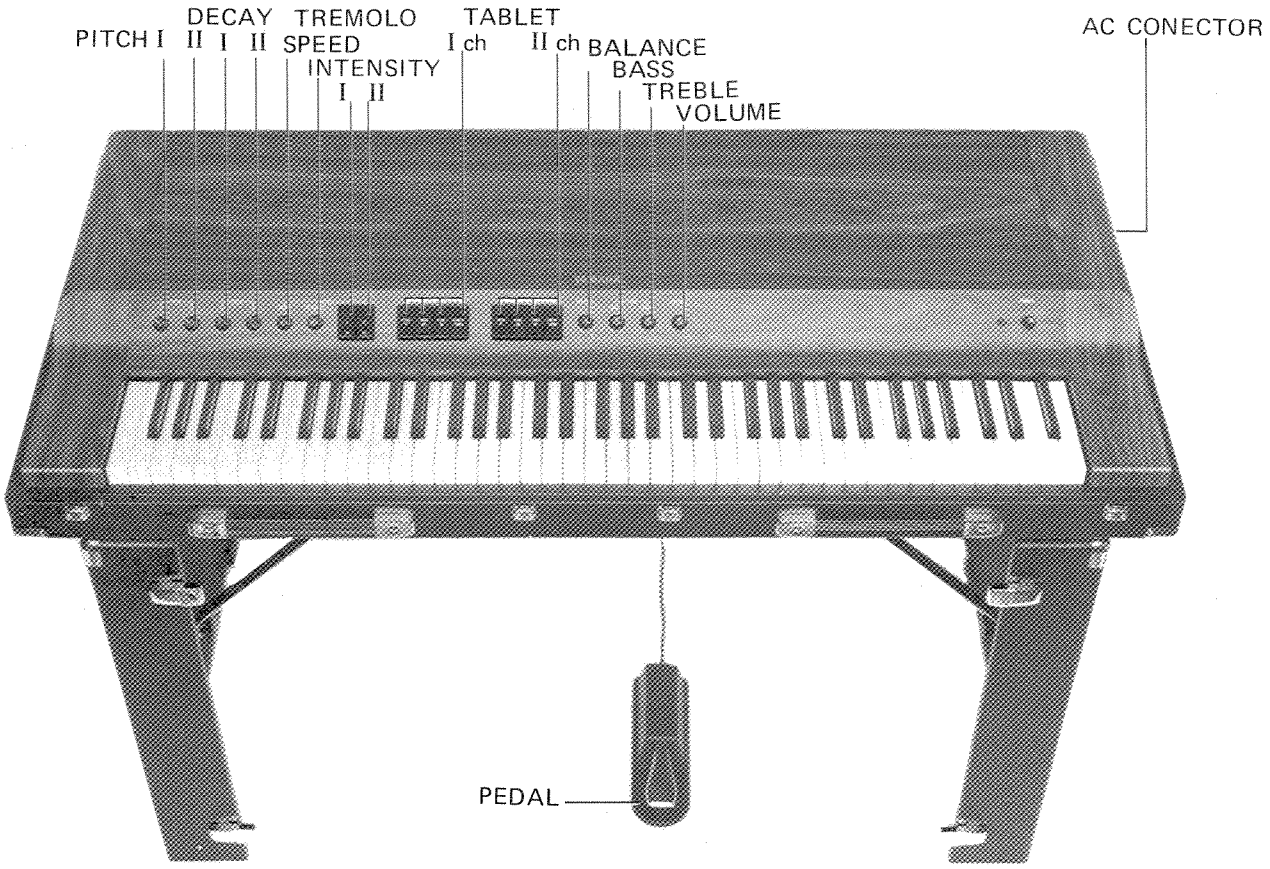
PITCH I
DECAY II
DECAY I
DECAY II
TREMOLO SPEED
INTENSITY I
INTENSITY II
TABLET I ch
TABLET II ch
BALANCE
BASS
TREBLE
VOLUME
AC CONECTOR
PEDAL

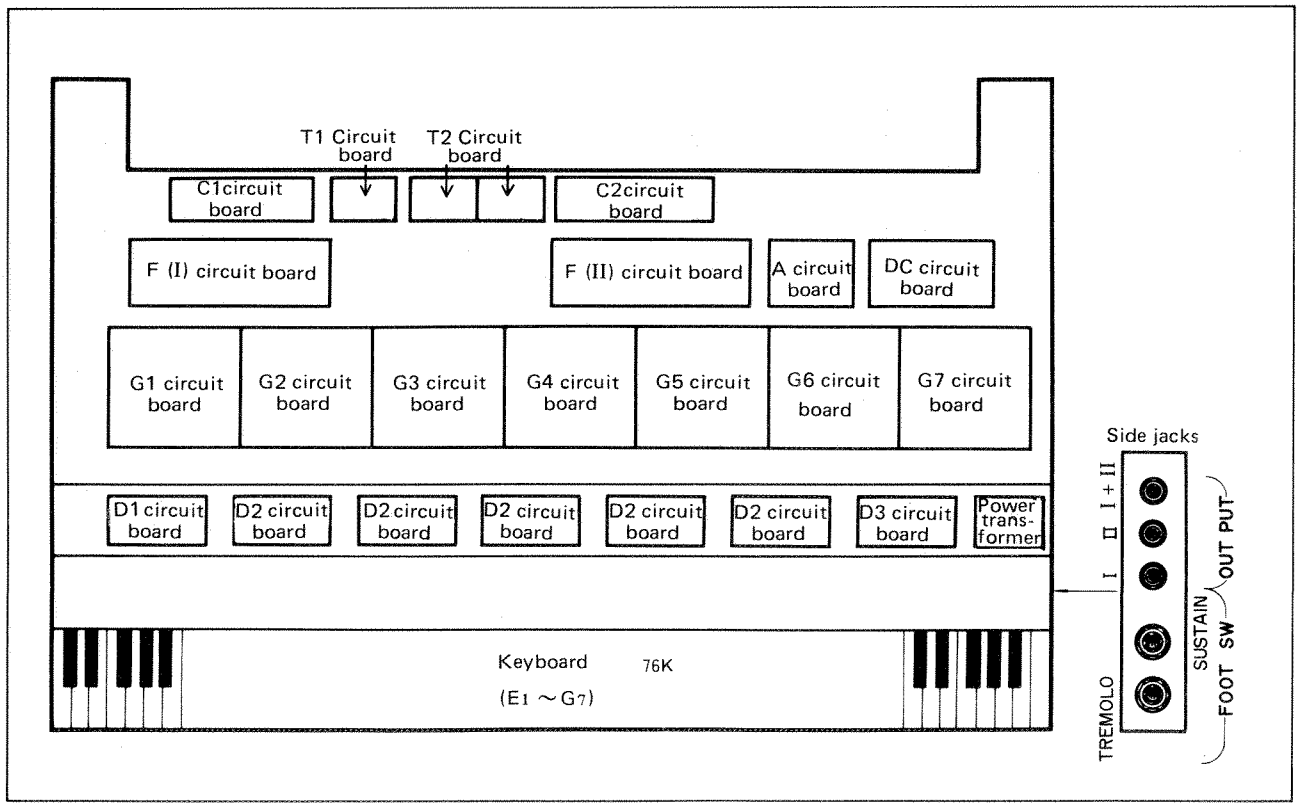
T1 Circuit board
T2 Circuit board
C1circuit board
C2circuit board
F (I) circuit board
F (II) circuit board
A circuit board
DC circuit board
G1 circuit board
G2 circuit board
G3 circuit board
G4 circuit board
G5 circuit board
G6 circuit board
G7 circuit board
D1 circuit board
D2 circuit board
D2 circuit board
D2 circuit board
D2 circuit board
D2 circuit board
D3 circuit board
Power trans-former
Keyboard 76K
(E1 ～G7)
Side jacks
I + II
II
I
TREMOLO
SUSTAIN
FOOT SW
OUT PUT

G1 Circuit Board & Wiring

G I

NA80222

1. Transistor
   Tr1 ～ 18 : 2SA844 (D) (E)
2. IC
   IC1 : YM253
   IC2 : YM252
3. Diode
   D1 ～ 54 : 1S1555

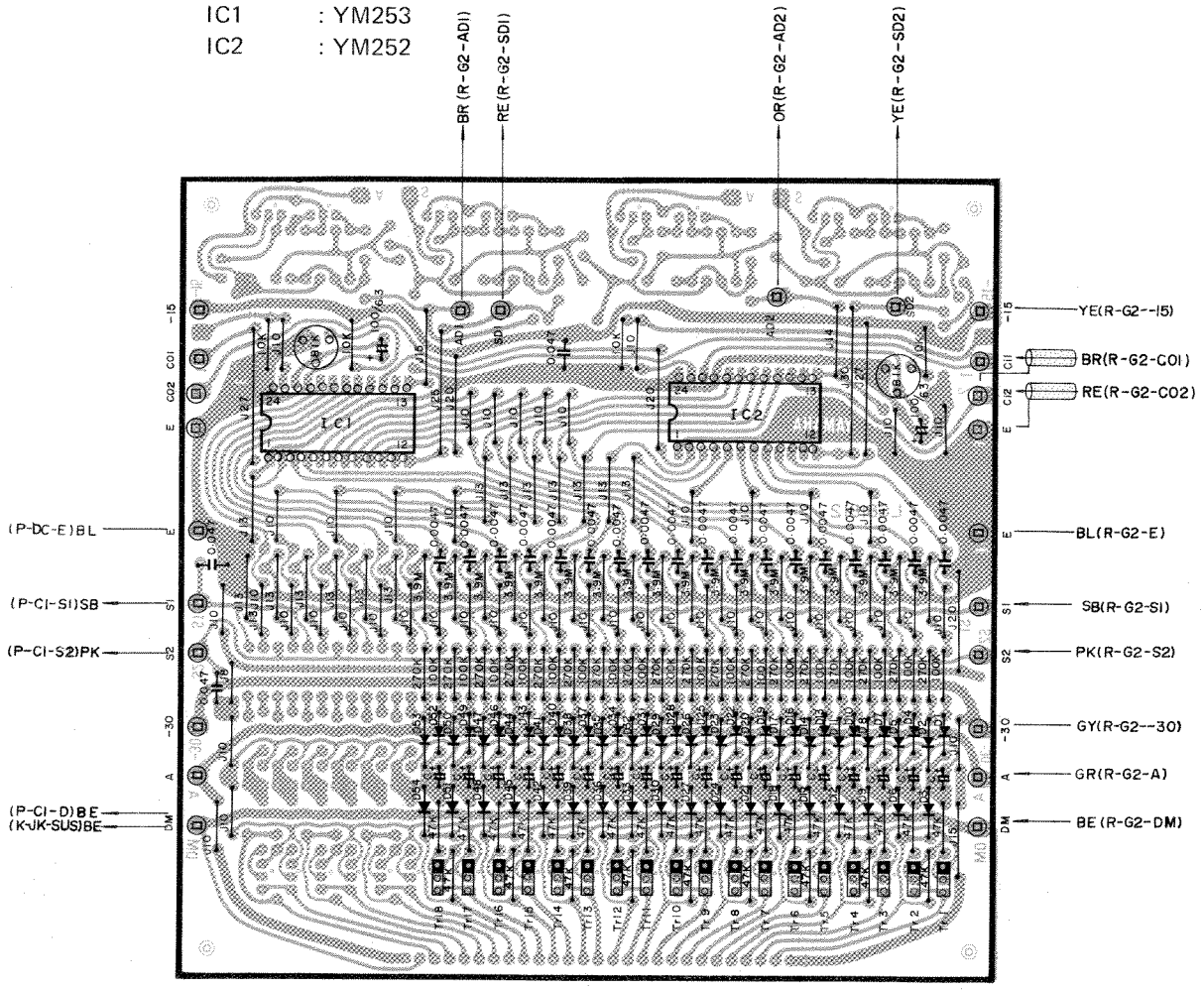

▼ Adjustment Locations

Channel I
attack adjusting pot,

Channel II
attack adjusting pot

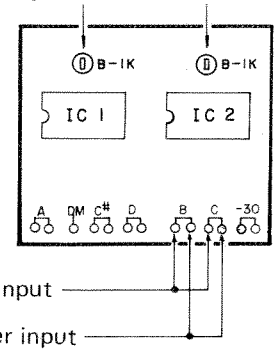

Attack adjusting pot is already adjusted before shipment, therefore do not touch it normally. However, if adjustment is needed because of IC replacement, etc., procede as follows;

1. Remove wires from output terminals (AD1, SD1, AD2 and SD2). Connect A 1KΩ load resistor from each output terminal to ground, respectively.
2. Apply −5VDC to the drive input (terminal ¡4) for note name E.
3. Measure the output waveform. Amplitude and waveshape should be as shown in the table below. Adjust respective B−1KΩ adjusting pot as necessary.

(Please recheck pattern of waveform)

Output Terminal	Waveform	Amplitude (P−P)
AD1		50 mV
SD1		130 mV
AD2		35 mV
SD2		130 mV

4. D3 Circuit

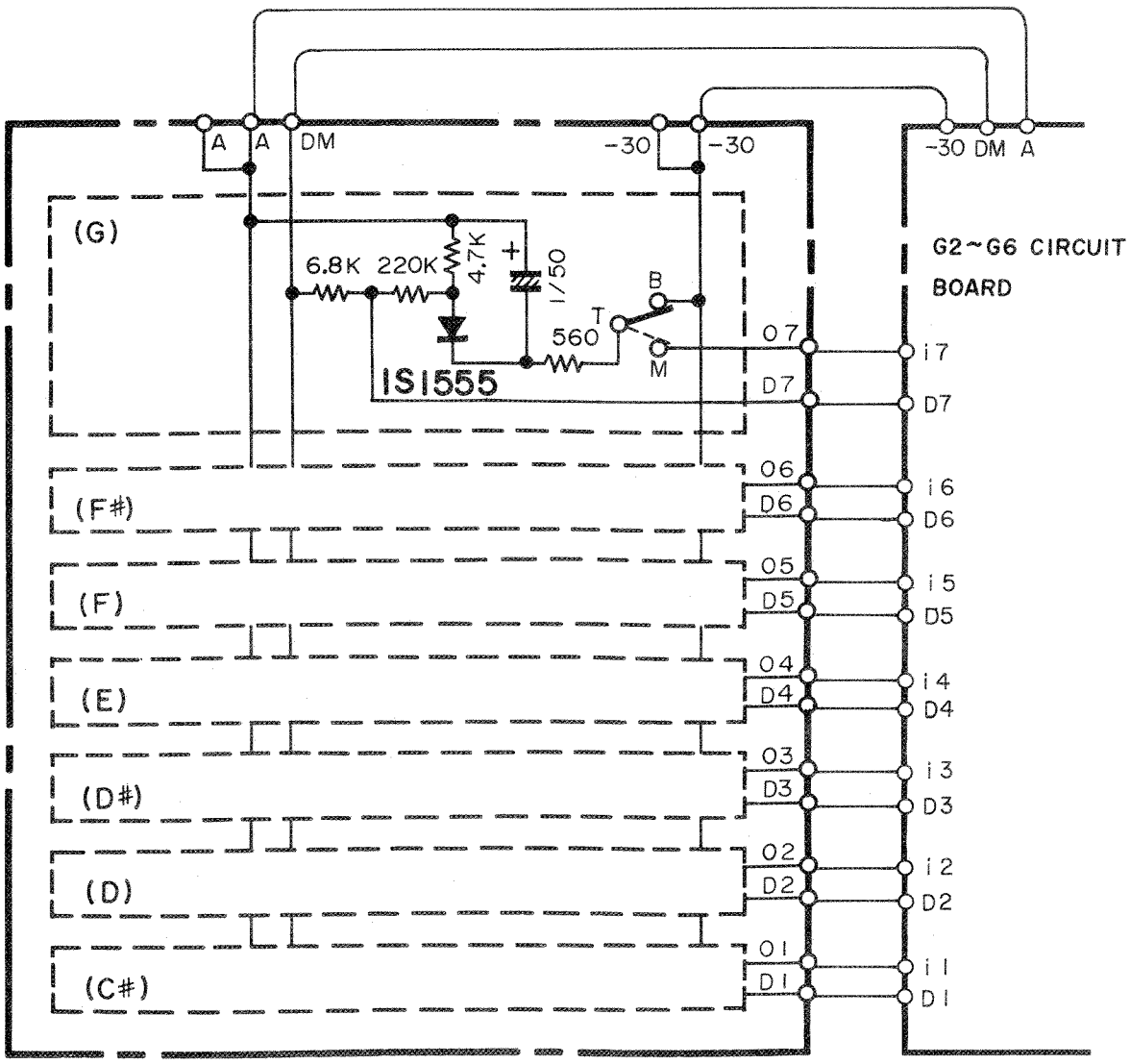

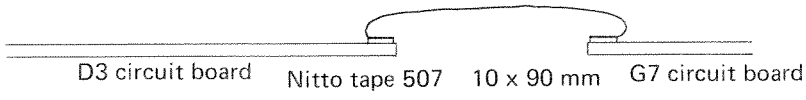

Note) Connection of D3 circuit board and G7 circuit board is, wired with jumper wire, and reinforced with two sided adhesive tape.

D3 Circuit Board & Wiring

D3

1. Diode
   D1～7 : 1S1555
2. Electrolytic capacitor
   1/50 (± 10%)
3. Key contacts, 7 keys

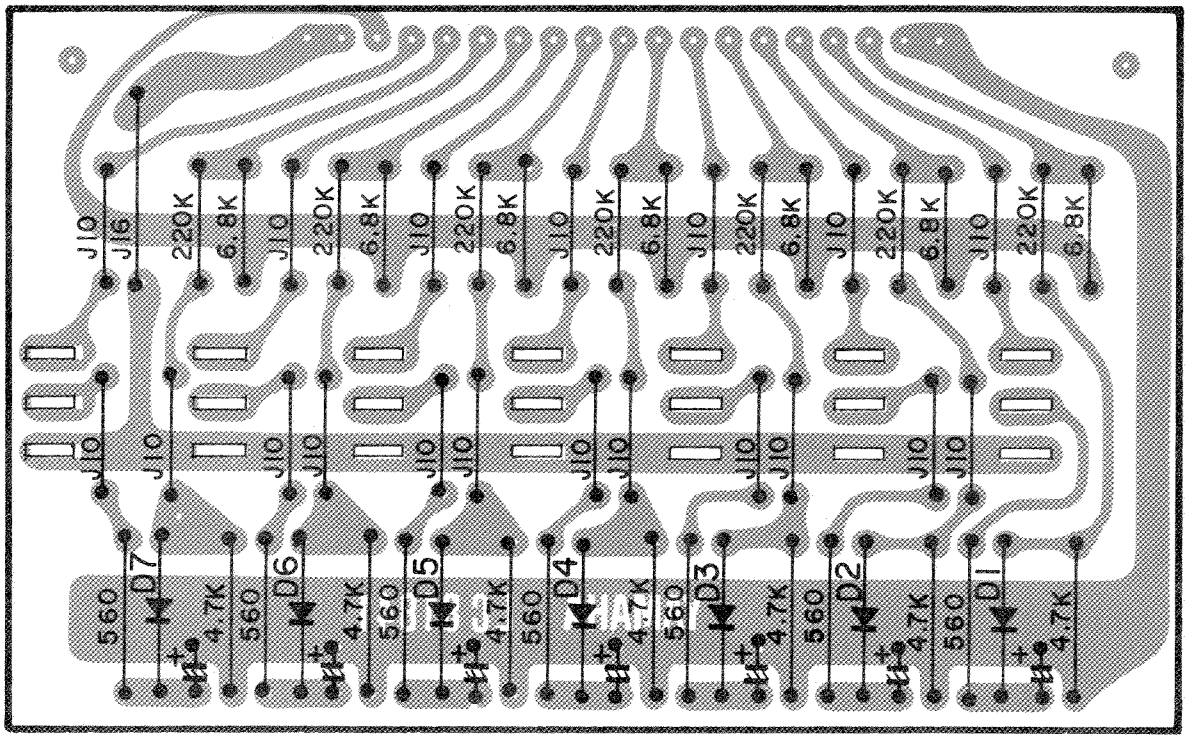

5. D2 Circuit

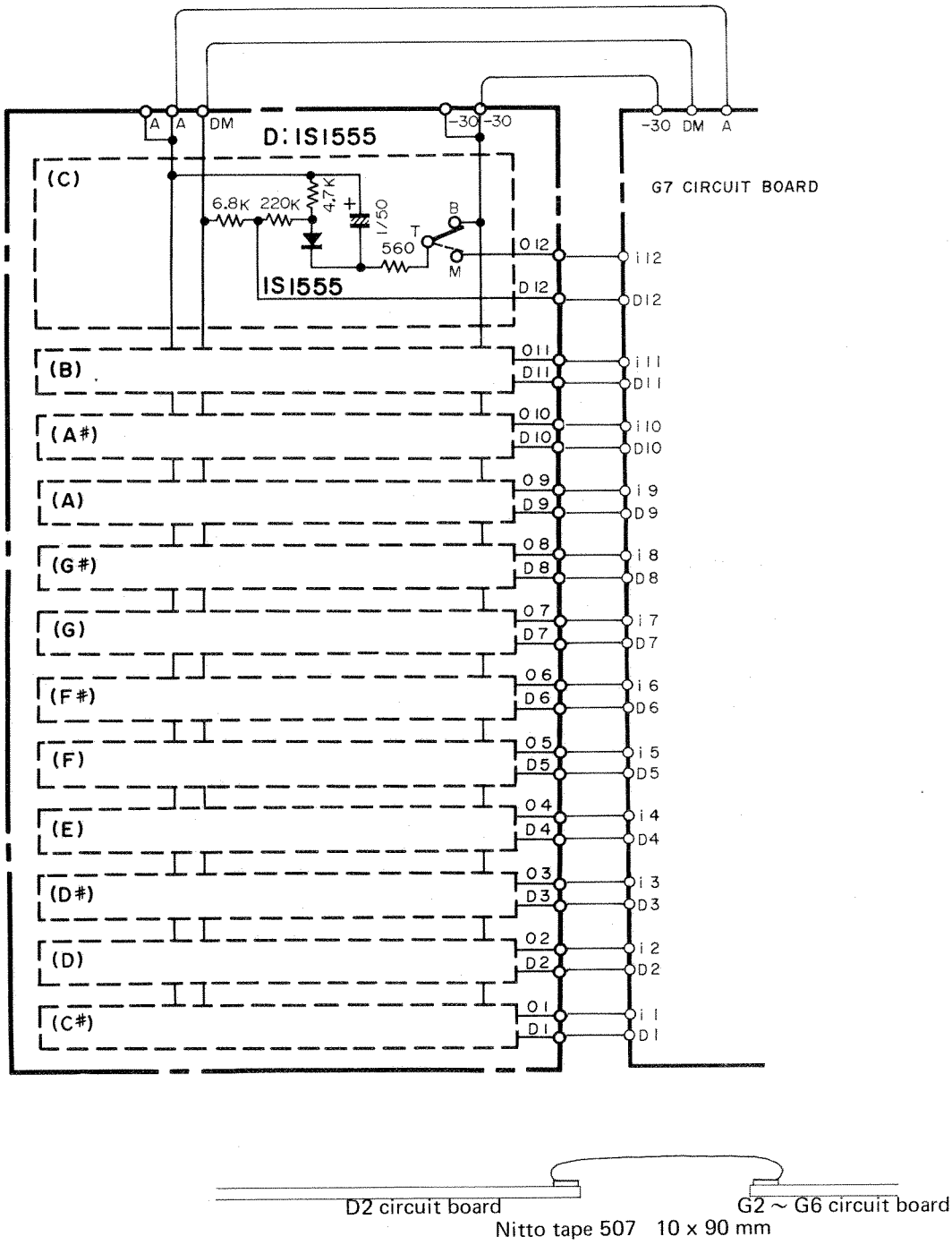

Note) D2 board is secured by both sides adhesive tape, after wiring is made with regard to each board of G2 — G6 (5 sheets) by jumper wire.
The five D2 boards are wired by jumper wire to boards G2 — G6 (5 sheets) and secured with two sided adhesive tape.

D2 Circuit Board & Wiring

D2

1. Diode
   D1 ～ 12 : 1S1555
2. Electrolytic capacitor
   1/50 (± 10%)
3. Key contacts, 12 keys

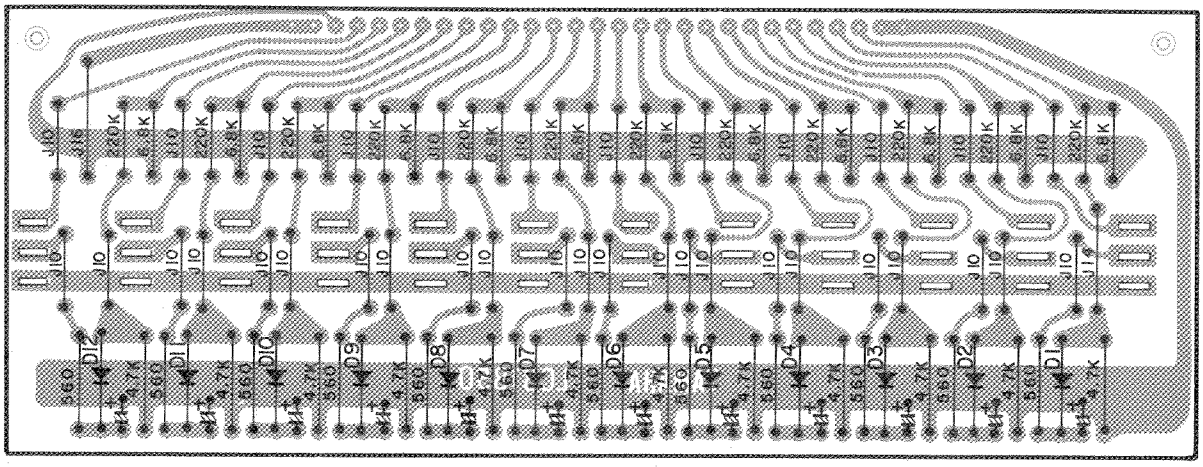

6. D1 Circuit

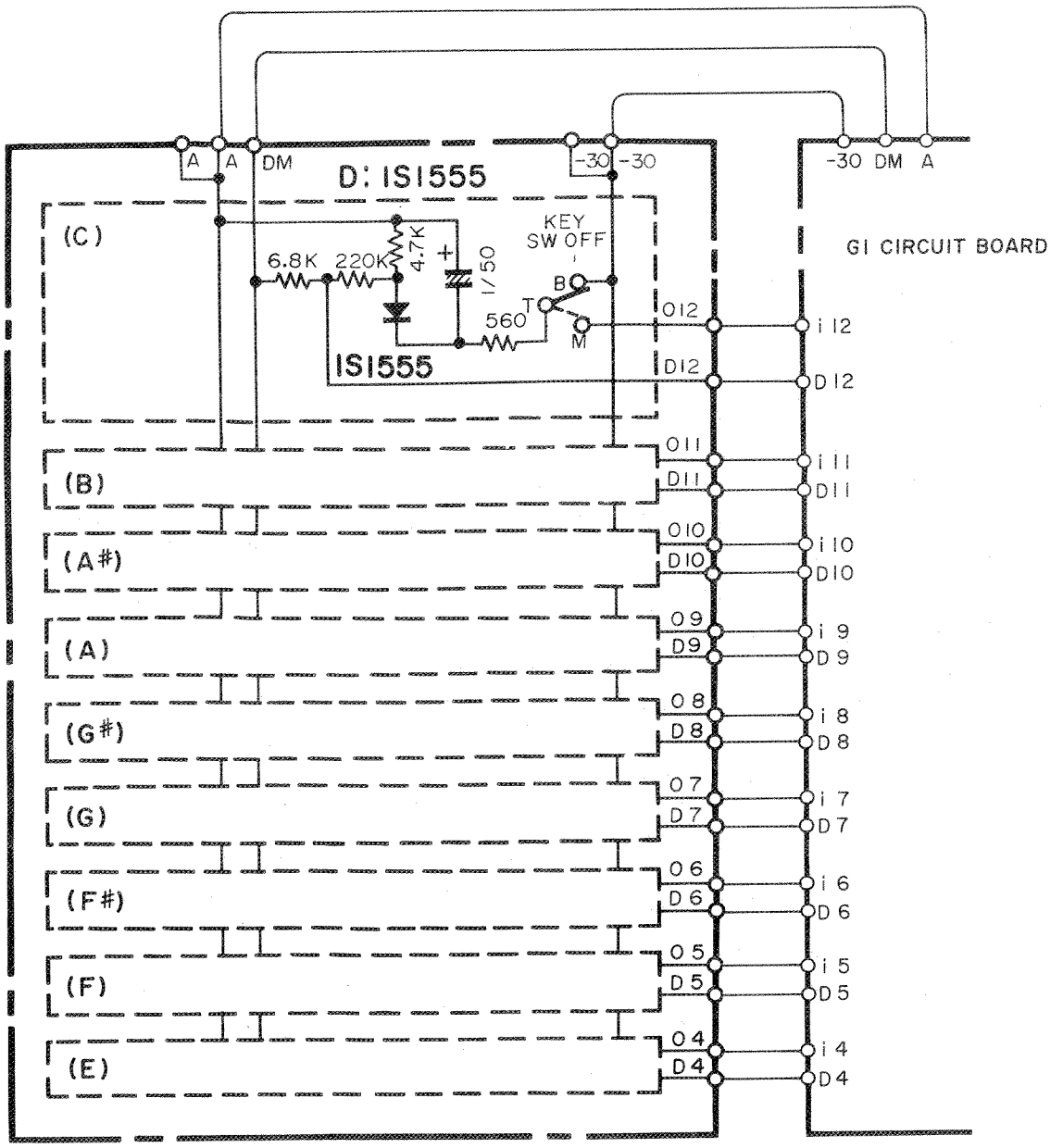

Note) Connection between D1 board and G1 board is secured with two sided adhesive tape, after being wired with jumper wire.

C2

C2 Circuit Board & Wiring

NA80216

1. Transistor
   Tr1, 3 : 2SA561 (O) (Y)
   Tr2, 4, 5, 6:2SC1681 (BL)
2. IC
   IC1, 2 : CA3080

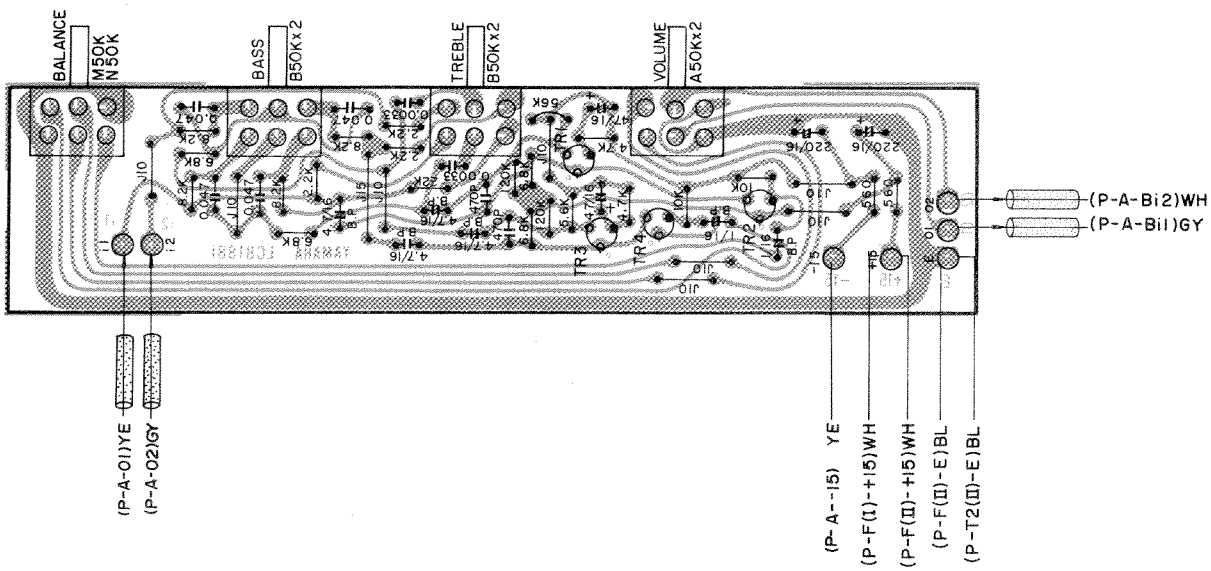

Horizontal component values on ckt board are upside down.

11. DC Circuit

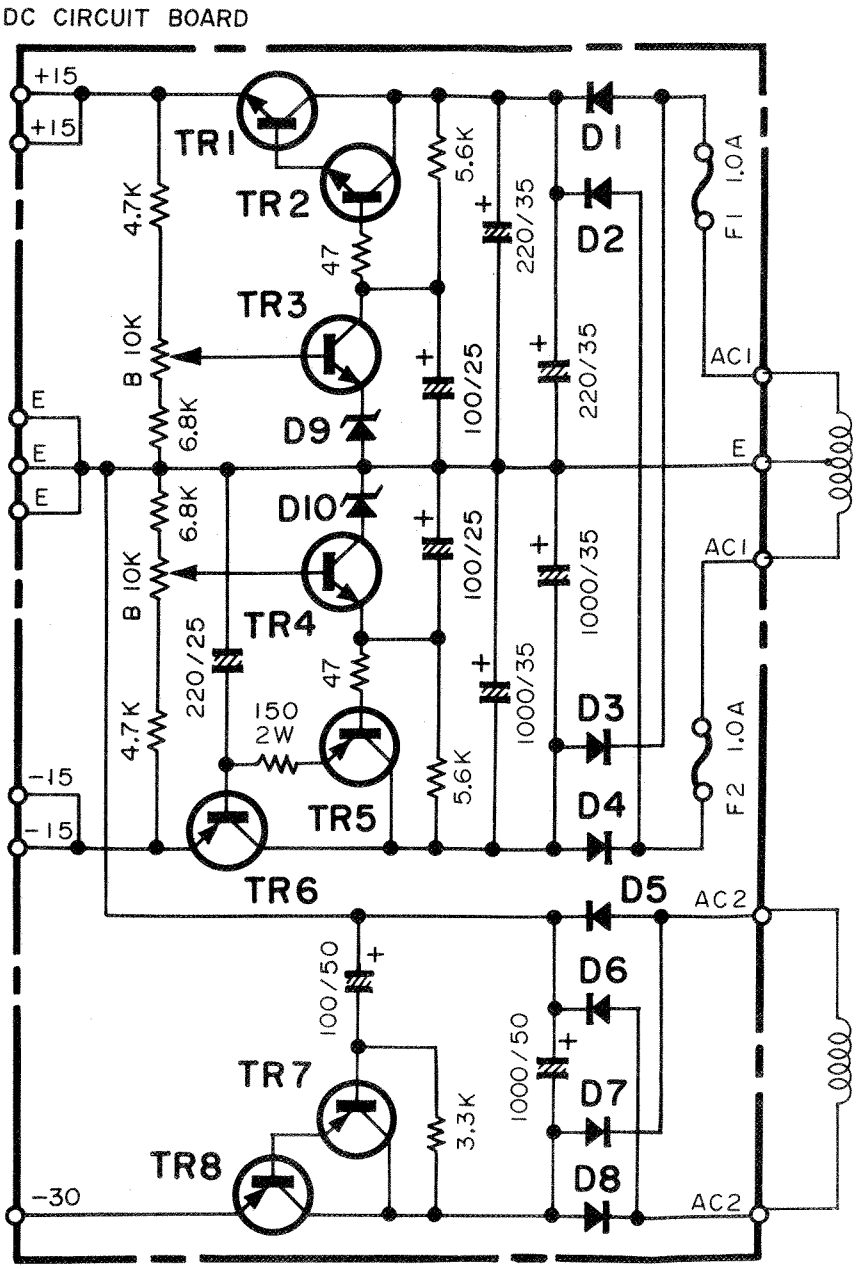

DC Circuit Board & Wiring

DC

1. Transistor
   - Tr1 : 2SD526 (R)
   - Tr2, 3 : 2SC1681 (BL)
   - Tr4, 5 : 2SA561 (Y) (O)
   - Tr6, 8 : 2SB596 (R)
   - Tr7 : 2SA777 (R)

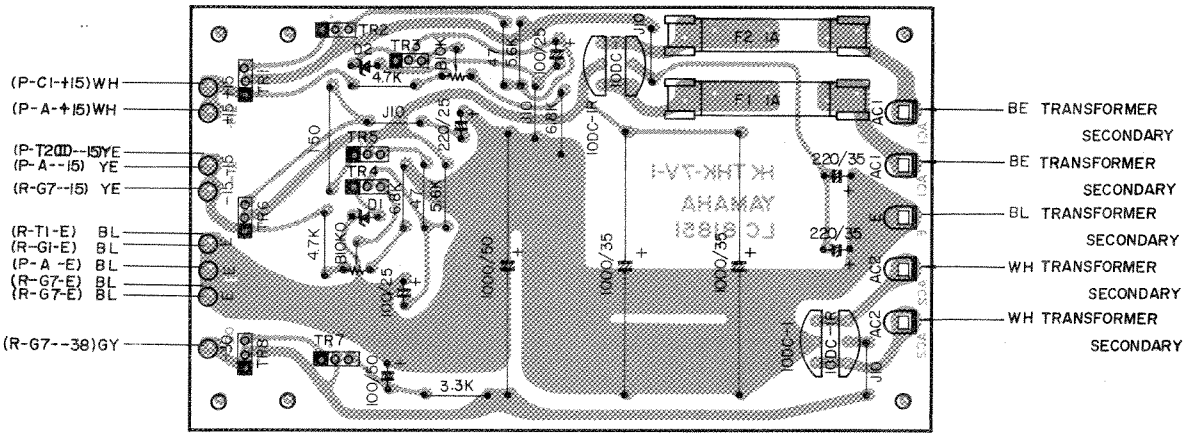

▼ Adjustment Locations

B-10K
VR 1 +15V Adj.

B-10K
VR 2 −15V Adj.

▼ Remarks

Kink leas or varnished tube is applied to diodes 10DC-1, 10DC-IR, so that diodes are floating by approx. 10 mm on the board.

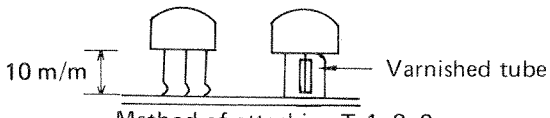

Method of attaching Tr1, 2, 3

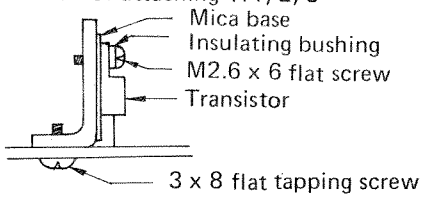

Silicon grease is applied between transistor, mica base and radiating plate, respectively.

All electrolytic capacitors are firmly attached.

* Use specifically accepted parts when replacing fuse and metal oxide film resistor.

12. T1, T2 Circuit, Circuit Board & Wiring

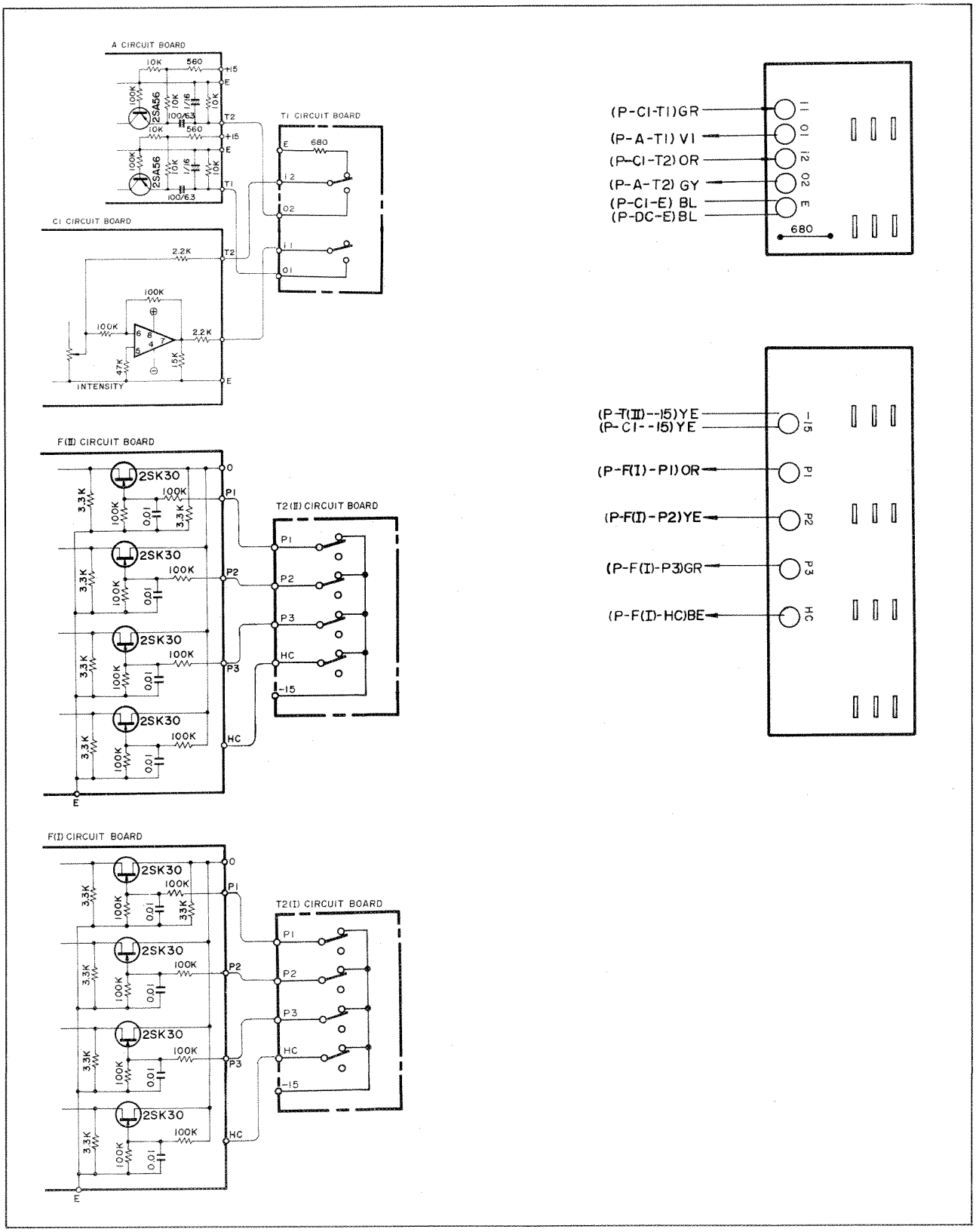

YAMAHA

ELECTRONIC PIANO

CP−30

PARTS LIST

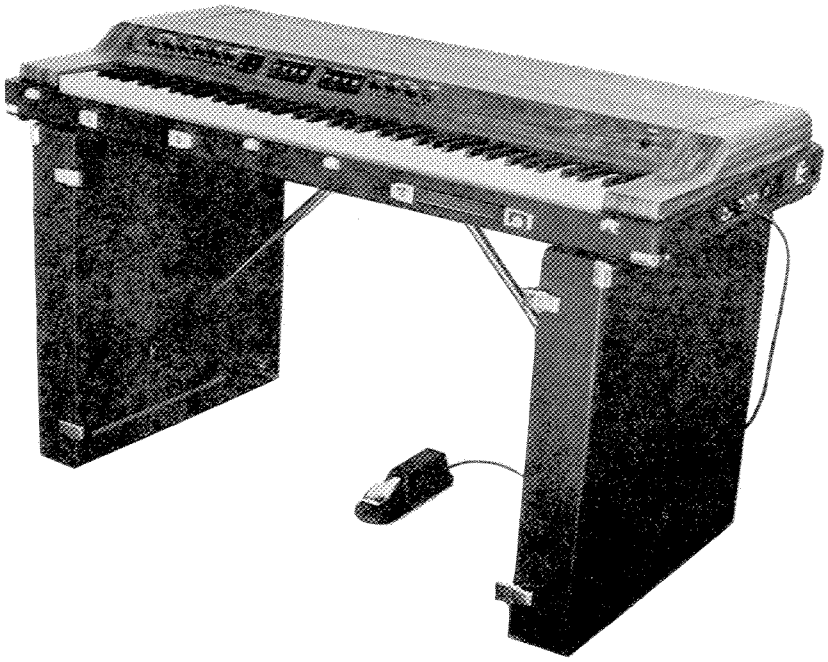

CONTENTS

1. Circuit Boards & Components(シート及びシート部品) 1
2. Power & Components (電源部品) 3
3. Contral Panel & Components (コントロールパネル部品) 4
4. Side Panel & Components (サイドパネル部品) 5
5. Keyboard & Components (鍵盤部品) 6
6. Sustainer Pedal (サスティナーペダル部品) 7
7. Cabinet (外装部品) 8

1 . Circuit Boards & Components

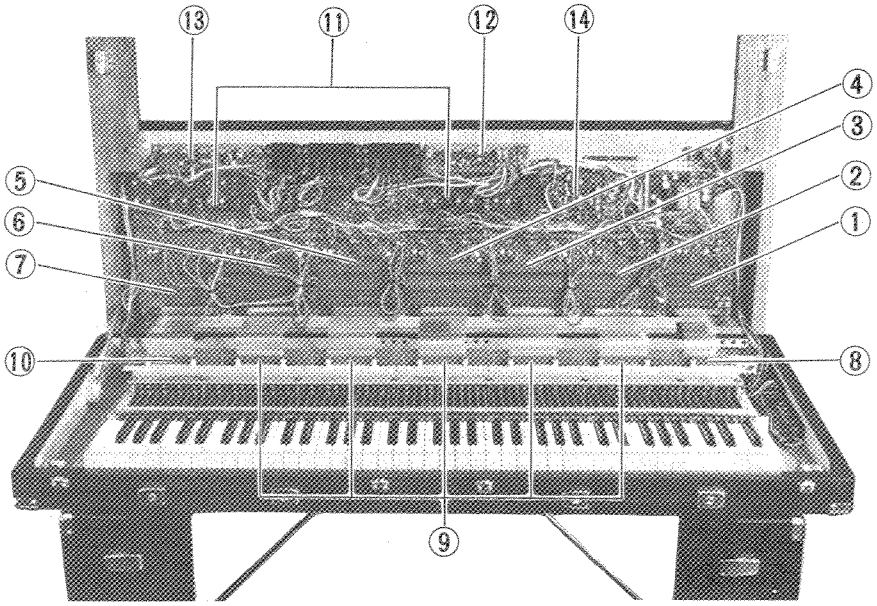

	Ref No.	Part No.(パーツ番号)	Description(部品名)				Remarks(備考)
※	①	301230NA802280	G 7	Circuit Board	#81821	G 7 シート	
※	②	301230NA802270	G 6	—do.—	#81811	G 6 シート	
※	③	301230NA802260	G 5	—do.—	—do.—	G 5 シート	
※	④	301230NA802250	G 4	—do.—	—do.—	G 4 シート	
※	⑤	301230NA802240	G 3	—do.—	—do.—	G 3 シート	
※	⑥	301230NA802230	G 2	—do.—	—do.—	G 2 シート	
※	⑦	301230NA802220	G 1	—do.—	—do.—	G 1 シート	
※	⑧	301230NA802210	D 3	—do.—	W/Key Switch	D 3 シート	
※	⑨	301230NA802200	D 2	—do.—	—do.—	D 2 シート	
※	⑩	301230NA802190	D 1	—do.—	—do.—	D 1 シート	
※	⑪	301230NA802300	F	Circuit Board	#81801	F シート	
※	⑫	301200NA802160	C 2	—do.—	#81881	C 2 シート	
※	⑬	301200NA802150	C 1	—do.—	#81870	C 1 シート	
※	⑭	301200NA802140	A	—do.—	#81861	A シート	
		401000iA049500	Transistor		2SA 495(O)(Y)	トランジスター	
		401000iA056170	—do.—		2SA 561(O)(Y)	トランジスター	
		401000iA084410	—do.—		2SA 844(D)(E)	トランジスター	
		401000iC045850	—do.—		2SC 458LG(C)	トランジスター	
		401000iC075230	—do.—		2SC 752(O)(Y)	トランジスター	
		401000iC082890	—do.—		2SC 828	トランジスター	
		401000iC168120	—do.—		2SC1682(BL)	トランジスター	
		401000iE000010	FET		2SK30	FET	
		401000iF000040	Diode		1S1555	ダイオード	
		401000iF000460	—do.—		—do.—	ダイオード	Tapeing
		401000iH000060	—do.—		10D－4	ダイオード	
※		401000iG000360	Integrated Circuit		CA3080	IC	
		401000iG001390	—do.—		RC4558	IC	

※ marked : New parts

	Ref No.	Part((（パーツ番号）	Description(部品名)			Remarks(備考)
		401000iG001400	—do.—	YM 253	I C	
※		301000YM252000	—do.—	YM 252	〃	
		401000HT410010	Variable Resistar	B —200Ω	可変抵抗器	Solid Type
		401000HT410020	—do.—	B —1KΩ	〃	—do.—
		401000HT410040	—do.—	B —4.7KΩ	〃	—do.—
		401000HT410140	—do.—	B —47KΩ	〃	—do.—
※		401000HS410470	—do.—	A —10KΩ	〃	16φ ℓ＝25(mm) 0.984(inch) h＝12.5(mm) 0.492(inch)
※		401000HS410480	—do.—	B —10KΩ	〃	—do.—
※		401000HS410490	—do.—	B —1KΩ	〃	—do.—
		401000HS410500	—do.—	B —50KΩ×2	〃	—do.—
		401000HS410510	—do.—	A —50KΩ×2	〃	—do.—
		401000HS410520	—do.—	MN —50KΩ×2	〃	—do.—
		401000HS410530	—do.—	C —50KΩ×2	〃	—do.—
		401000GE300120	Choke Coil	100μH	高周波チョークコイル	
		401000GE900180	OSC Coil	200μH	OSCコイル	
		401000GB064220	Filter Coil	200mH	フィルターコイル	
		401000GB064330	—do.—	330mH	〃	
		401000GB064470	—do.—	470mH	〃	
※		301000CB027800	Switch Cover		スイッチカバー	for D1 & D2 Circuit Boards
※		301000CB808800	—do.—		〃	for D3 Circuit Board
※		401000Mi800980	Jumper—line		ジャンパーリード	for G1～G6 Circuit Boards
※		401000Mi800990	—do.—		〃	for G7 Circuit Board

※ marked : New parts

2 . Power & Components

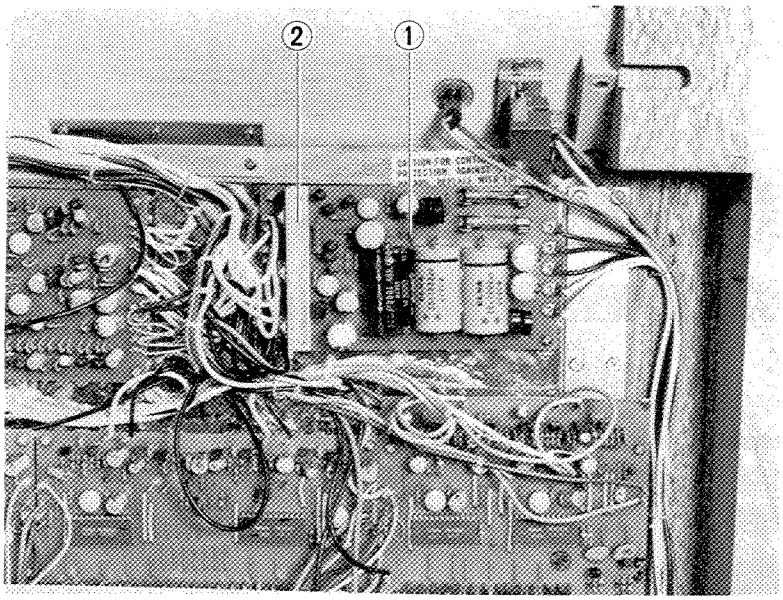

	Ref No.	Part No.(パーツ番号)	Description(部品名)			Remarks(備考)
※	①	3 0 1 2 0 0 N A 8 0 2 1 1 0	DC Circuit Board		DCシート	Japan,S.African & Australian models
※		3 0 1 2 0 0 N A 8 0 2 1 2 0	—do.—		〃	US & Canadian models
※		3 0 1 2 0 0 N A 8 0 2 1 3 0	—do.—		〃	N.European & BS models
		4 0 1 0 0 0 i A 0 5 6 1 7 0	Transister	2 S A 561(O)(Y)	トランジスター	
		4 0 1 0 0 0 i A 0 7 7 3 0	—do.—	2 S A 777(R)	〃	
		4 0 1 0 0 0 i B 0 5 9 6 2 0	—do.—	2 S B 596(R)(O)	〃	
		4 0 1 0 0 0 i C 1 6 8 1 2 0	—do.—	2 S C 1681(B L)	〃	
		4 0 1 0 0 0 i D 0 5 2 6 1 0	—do.—	2 S D 526(R)(O)	〃	
		4 0 1 0 0 0 i F 0 0 0 1 0 0	Zener Diode	1 S 1715	ダイオード	
		4 0 1 0 0 0 i H 0 0 0 1 4 0	Diode	10 D C — 4	〃	
		4 0 1 0 0 0 i H 0 0 0 1 5 0	—do.—	10 D C — 4 R	〃	
		4 0 1 0 0 0 H T 4 1 0 0 7 0	Variable Resistor	B — 10 K Ω	可変抵抗	
		4 0 1 0 0 0 K B 0 0 0 3 3 0	Fuse	250 V 1.0 A	ヒューズ	Japan,S.African & Australian models
		4 0 1 0 0 0 K B 0 0 0 7 3 0	—do.— Ⓢ	250 V 1.0 A T	〃	N.European & BS models
※		4 0 1 0 0 0 K B Q 0 1 0 2 0	—do.—	1.0 A S S — 2	〃	US & Canadian models
※	②	3 0 1 0 0 0 B A 8 0 1 7 5 0	Heat Sink		放熱板	

※ marked : New parts

3 . Control Panel & Components

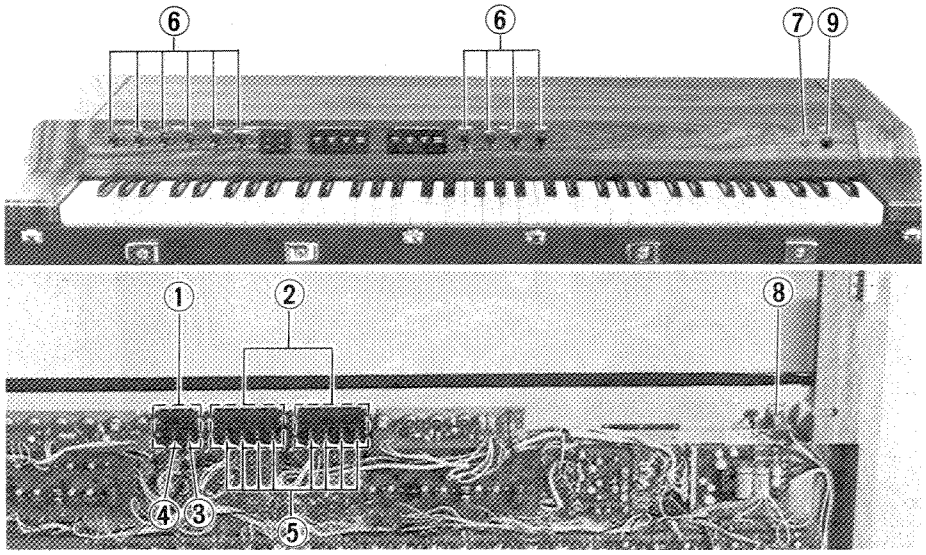

	Ref No.	Part No.(パーツ番号)	Description(部品名)		Remarks(備考)
※	①	301230NB805990	Tablet Assembly	タブレットアッセンブリー	TREMOLO
※	②	301230NB806000	—do.—	〃	Filter Ⅰ, Ⅱ
	③	301000NB037040	Switch Assembly	スイッチアッセンブリー	TREMOLOⅡ 1T
	④	301000NB037050	—do.—	〃	TREMOLOⅠ 1M
	⑤	301000NB037060	—do.—	〃	Filter Ⅰ, Ⅱ 1B
※	⑥	301000CB808400	Knob	つ ま み	Variable Resistor
	⑦	401000JB000360	Neon Bracket Lamp	ネオンブラケットランプ	BNR－3V
	⑧	401000KA800200	Push Switch SDG5P001	プッシュスイッチ	US & Canadian madols
		401000KA800210	—do.— —do.—502	〃	Australian,BS & N.Europian models 250V 4A
		401000KA800220	—do.— —do.—	〃	Japan & S.African models 125V 10A
	⑨	301000CB808450	Push Button	プッシュボタン	

※ marked : New parts

4 . Side Panel & Components

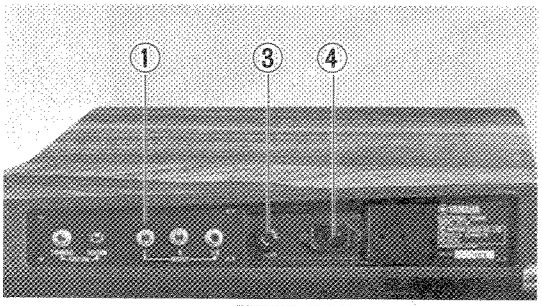

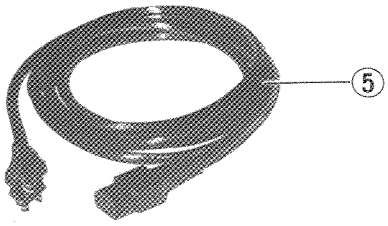

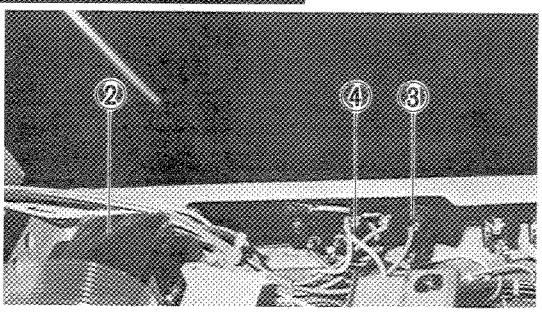

	Ref. No	Part No.(パーツ番号)	Description(部品名)			Remarks(備考)
※	①	301000AA804430	Side Panel		サイドパネル	Japan model
※		301000AA804440	—do.—		〃	US model
※		301000AA804450	—do.—		〃	Canadian model
※		301000AA804460	—do.—		〃	Austrlian model
※		301000AA804470	—do.—		〃	S.African,BS & N.European models
※	②	401000GA804700	Power Transformer		電源トランス	
	③	401000LB200490	Fuse Holder	#20049	ヒューズホルダー	Japan model
		401000LB200480	—do.—	#20048	〃	US,S.African,Australian & Canadian models
		401000LB200590	—do.—	#20059	〃	N.European & BS models
		401000KB000310	Fuse	250V 0.5A	ヒューズ	Japan,S.African & Australian models
		401000KB001150	—do.—	250V 0.5A	〃	US & Canadian models
		401000KB000710	—do.— Ⓢ	250V 0.5AT	〃	BS & N.European models
		401000KB000820	Lead Type Fuse	250V 1A	リード付ヒューズ	US & Canadian models
	④	401000LB300290	AC Socket #30029 STF-74-A1		ACソケット	PM－1000
		401000LB200250	Voltage Selector #20025		電圧切換器	S.African,BS & N.European models
	⑤	401000MG000580	AC Power Cord Assembly		電源コード	US & Canadian models
		301200MZ800650	—do.—		〃	S.African model PM－1000
		301200MZ801740	—do.—		〃	Australian model —do.—
		301200MZ801750	—do.—		〃	BS model —do.—
		401000MG000360	—do.—		〃	N.European model —do.—
		401000MG000560	—do.—		〃	Japan model —do.—

※ marked : New parts

5 . Keyboard & Components

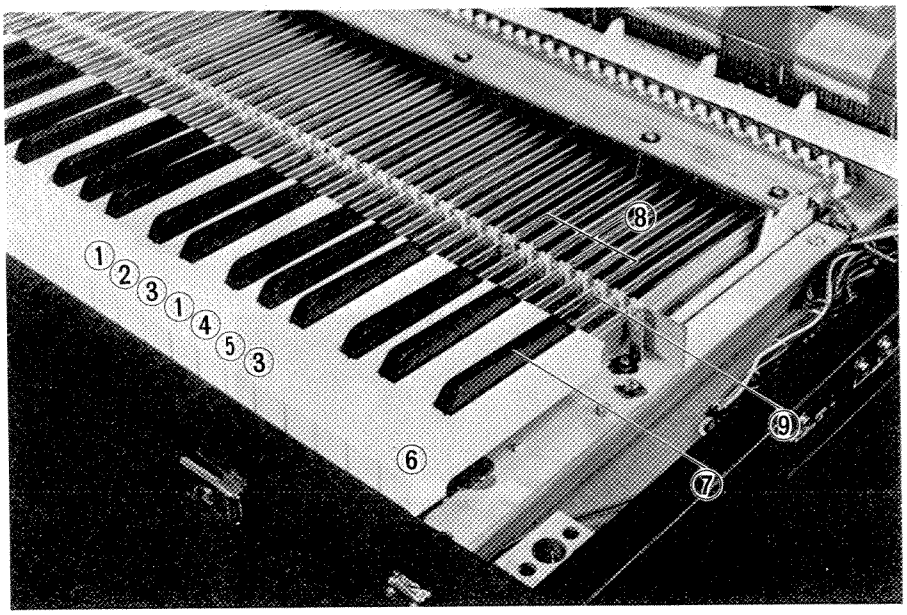

	Ref. No.	Part No.(パーツ番号)	Description(部品名)			Remarks(備考)
※	①	3 0 1 1 8 0 N B 0 4 3 4 3 0	White Key Assembly	C, F	白鍵アッセンブリー	
※	②	3 0 1 1 8 0 N B 0 4 3 4 4 0	—do.—	D	〃	
※	③	3 0 1 1 8 0 N B 0 4 3 4 5 0	—do.—	E, B	〃	
※	④	3 0 1 1 8 0 N B 0 4 3 4 6 0	—do.—	G	〃	
※	⑤	3 0 1 1 8 0 N B 0 4 3 4 7 0	—do.—	A	〃	
※	⑥	3 0 1 1 8 0 N B 0 4 3 4 9 0	—do.—	G′	〃	Extreme right side of the Keyboard (73key)
※		3 0 1 1 8 0 N B 0 4 5 1 0 0	—do.—	E′	〃	Extreme left side of the Keyboard (1 key)
※	⑦	3 0 1 1 8 0 N B 0 4 3 5 1 0	Black Key Assembly		黒鍵アッセンブリー	
※	⑧	3 0 1 0 0 0 C B 0 2 7 8 4 0	Support		サポート	
※	⑨	3 0 1 0 0 0 C B 0 2 8 4 1 0	Pibot Rubber		ピボットゴム	

※ marked : New parts

6. Sustainer Pedal

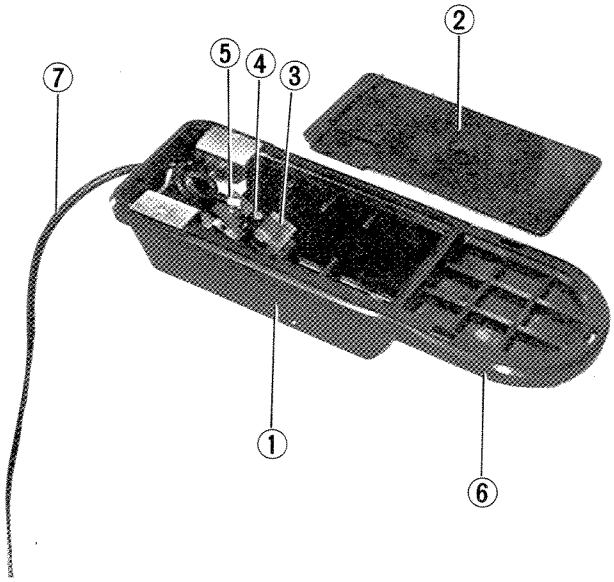

	Ref. No.	Part No.(パーツ番号)	Description(部品名)		Remarks(備考)
※	①	301000CB806740	Pedal Box	ペダル本体	
※	②	301000CB806750	Bottom Plate	底板	
	③	301000NB037140	Tablet Switch	タブレットスイッチ	1M W／Actuator
※	④	301000CB808360	—do.— Cover	接点カバー	
※	⑤	401000CA800450	Fiber Washer	ファイバーワッシャ	
※	⑥	301000AA803240	Pedal	ペダル	
		301000AA803260	—do.— leaf Spring	ペダル板バネ	
※	⑦	301000Mi014220	Cord Assembly	コード	

※ marked : New parts

7 . Cabinet

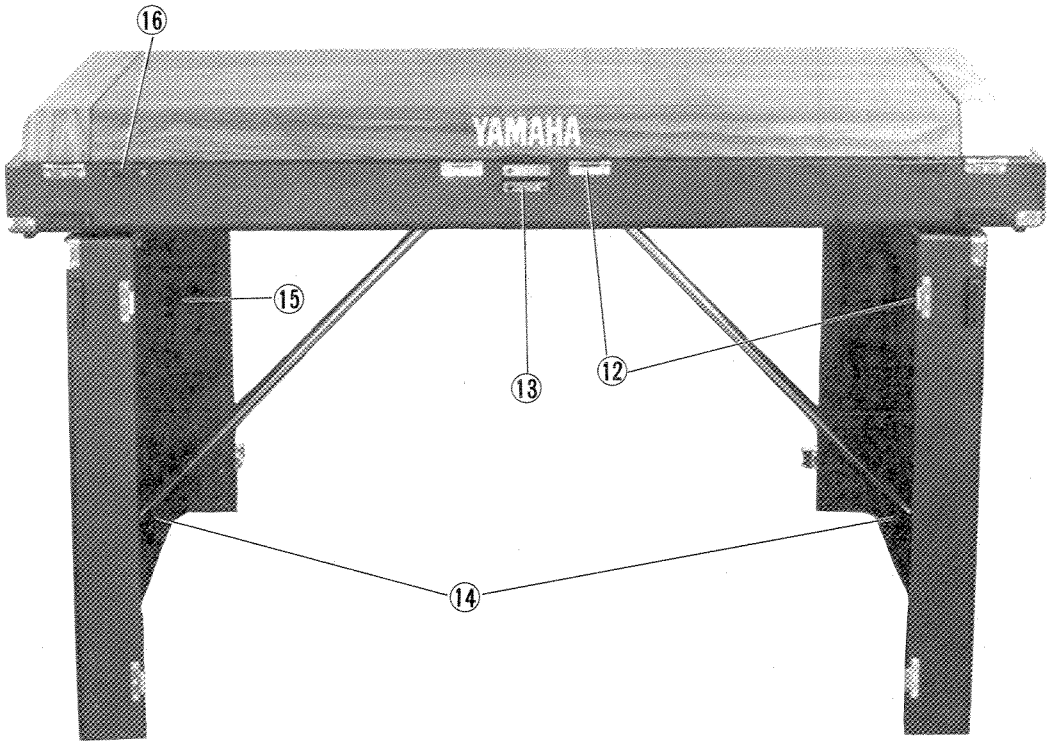

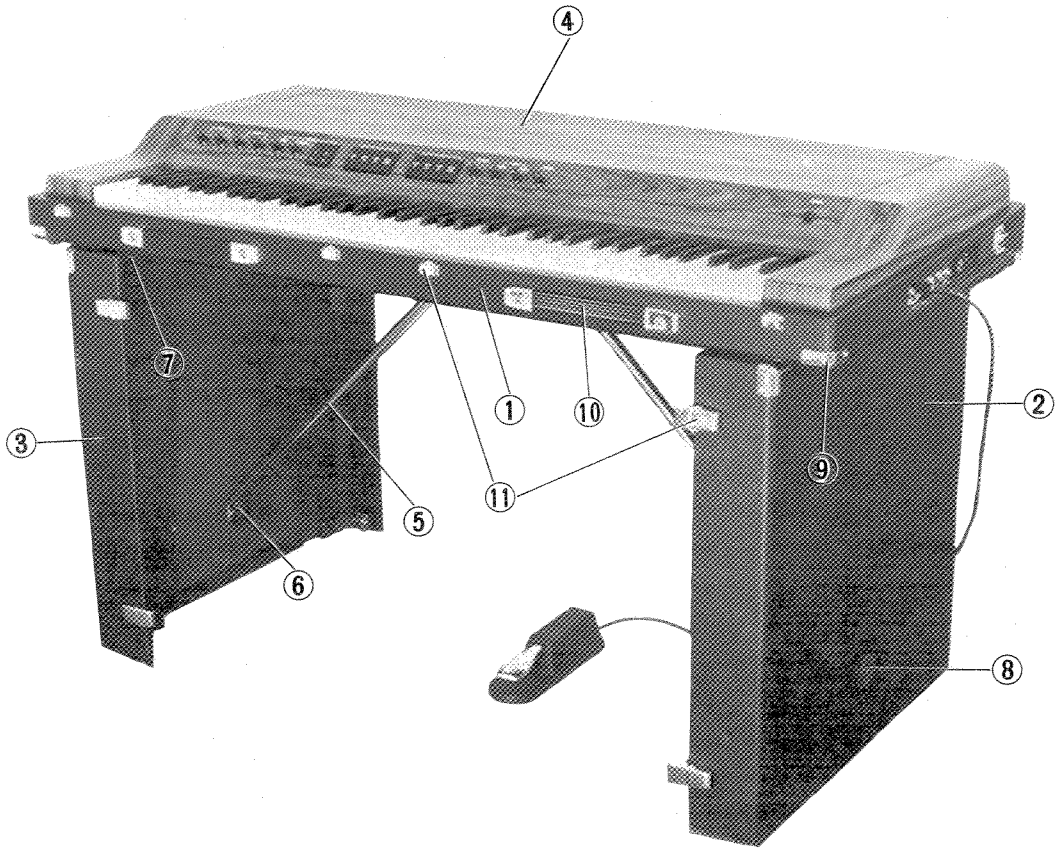

	Ref. No.	Part No.(パーツ番号)	Description(部品名)		Remarks(備考)
※	①	301230240214 00	Bottom Frame	底　枠	
※	②	301230240213 50	Lege (Left)	蓋　脚(左)	
※	③	301230240213 60	－do.－ (Right)	蓋　脚(右)	
※	④	301230240410 10	Top Board	屋　根	
※	⑤	301000AA804390	Stay	脚　柱	
※	⑥	301000CB808330	Knob Bolt	ノブネジ	
		301000AA804630	Stay Ling	脚柱リング	
※	⑦	401000CB808340	Knod Bolt	ノブネジ	
※	⑧	301000AA804270	Stay Nut	脚用ナット	
		401000EB330160	Flat Head Screw 3×16 ZMC2-Bl	皿小ネジ	
	⑨	305400AA800790	Corner Holder Blacket	コーナー金具	J－45
		401000EZ980140	Truss Head Tapping Screw 3×12 FCrM3-2b	トラスタッピンネジ1種	
※	⑩	301000NB805950	Handle Assembly	取手アッセン	
		401000EQ035130	Round Head Wooden Screw 3.5×13 ZMC2-Y	丸木ネジ	
	⑪	401000AA802450	Lock	パッチン錠	PM－430
		401000EC230160	Truss Head Screw 3×16 FCrM3 2b	⊕トラス小ネジ	
		401000EC230140	Truss Head Screw 3×14 FCrM3 2b	⊕トラス小ネジ	
		802460			
	⑫	301000AA981810	Hanging Hinge	引掛蝶番	
		401000EB230100	Flat Head Screw 3×10 FCrM3 -2b	⊕皿小ネジ	
	⑬	301000CB010310	Case Leg	脚	TA－20, 30 YC－30
		401000EP335200	Flat Head Wooden Screw 3.5×20 ZMC2-Bl	⊕皿木ネジ	
※		301000AA804540	Washer for Leg Holder	脚受座金	
		401000EP335130	Flat Head Wooden Screw 3.5×13 ZMC2-Bl	⊕皿木ネジ	
※	⑭	301000AA804290	Slip Washer	滑り座	
		401000ER330160	Oval Head Wooden Screw 3×16 ZMC2-Bl	⊕丸皿木ネジ	
※	⑮	301000NB805960	Pedal Stopper Band Assembly	ペダル止めバンド	
※		301000AA804320	Hanging Holder Blacket	引掛金具	
		401000EQ335130	Round Head Wooden Screw 3.5×13 ZMC2-Bl	⊕丸木ネジ	
※	⑯	305400AA804360	Hinge	蝶番	
		401000EO030120	Flat Head Tapping Screw 3×12 ZMC2-Y	皿タッピンネジ1種	
		305400AA802530	Stay Left	ステー(左)	PM－700
		305400AA802540	Holder Stay	ステー押え金具	－do.－
		401000EQ031100	Round Head Wooden Screw 3.1×10 ZMC2-Y	丸小ネジ	－do.－

※ marked : New parts

Ref No.	Part No.(パーツ番号)	Description(部品名)		Remarks(備考)

●SETUP

1. Removal Top Lid

a. Unlatch the locks ① ～ ④ of the top lid, (Fig. 1) then lift the lid.

Fig. 1

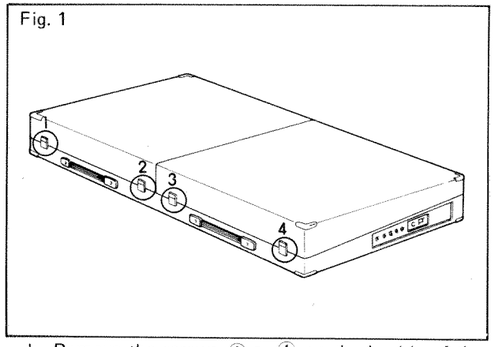

b. Remove the screws ① ～ ④ on the in side of the lid and take out the two supporting bars, the power cord and the sustain pedal (refer to Fig. 2).

Fig. 2

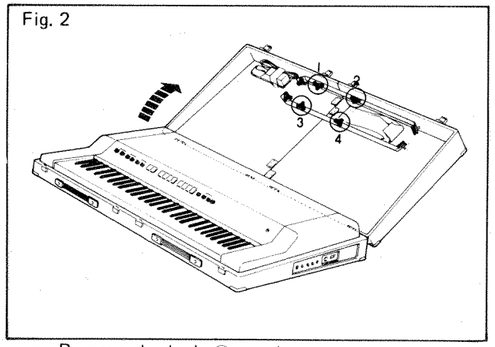

c. Remove the lock ⑤ on the rear in side of the lid, then seperate the right and left parts of the cover (refer to Fig. 3).

Fig. 3

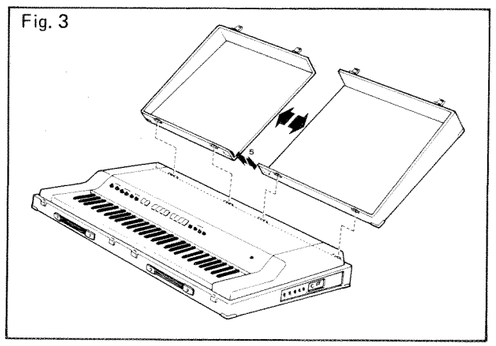

2. Assembly of the Body

a. Position the body on a suitable base, then attach the lids on both sides (refer to Fig. 4).

* Use screws ① ～ ④ as shown in Fig. 1 when attaching the lids.

b. Insert the supporting bars between the body and the lids on both sides, then tighten them by the screws (refer to Fig. 4).

Fig. 4

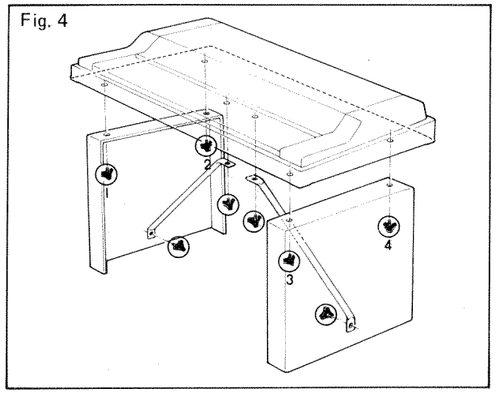

3. Interconnection

Insert the plugs of the power cord, output cord, pedal switch, etc. into the body (refer to Fig. 5)

Fig. 5

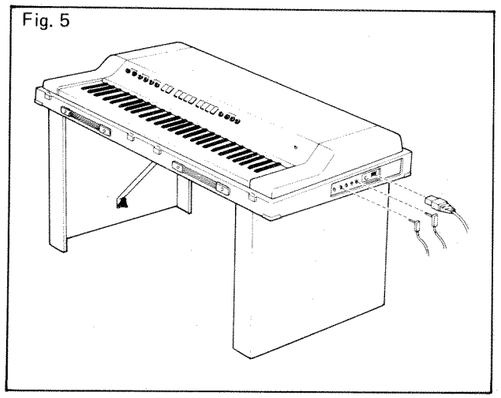

●DISASSEMBLY PROCEDURES

1. Opening and Closing the Panel

(1) Loosen the screws 1 and 2 located below the both sides of the body, then raise the panel upward.

(2) Fix the panel by hooking the stopper stored at the left side of the panel onto the body (refer to Fig. 1).

Fig. 1

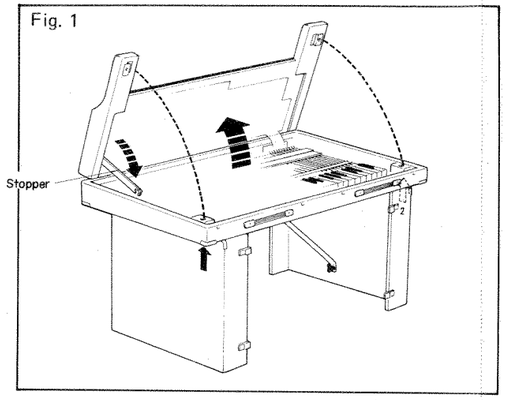

3. Keyboard Removal

(1) Open the panel referring to the step 1.

(2) Remove the screws of the keyboard pressing fitting and the support pressing fitting.

(3) When removing the keyboard, remove the screw of the D board while taking care not to dash the rear part of the keyboard against the switch pieces, then move the D board to the rear side and remove the keyboard.

(4) Make sure to remove the black key previously and then pull out the white key.

Fig. 3

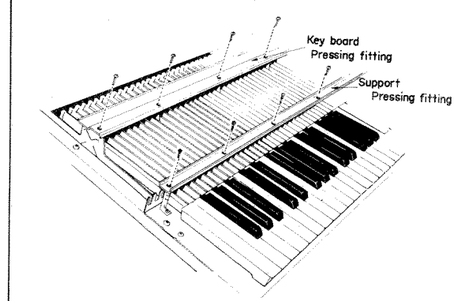

2. D Circuit Board Removal

(1) Open the panel referring to the step 1.

(2) Remove the screws 1 – 4 as shown in Fig. 2, then remove the boards D1 ～ D3.

Fig. 2

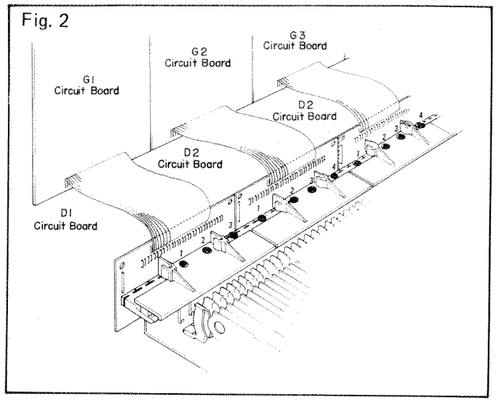

4. Disassembly of the Pedal

(1) Remove the pedal by inserting the fingers, as if peeling it.

(2) Replace the pedal switch after removing the screw 1.

Fig. 4

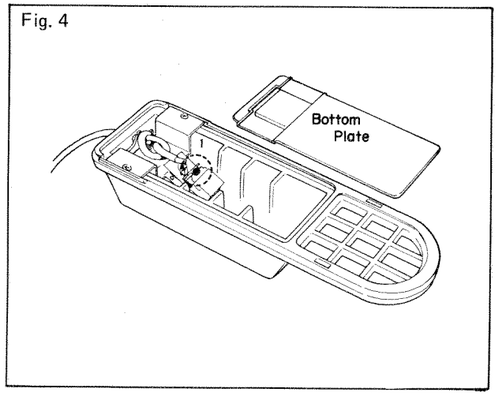

1. G7 Circuit (C7#～G7)

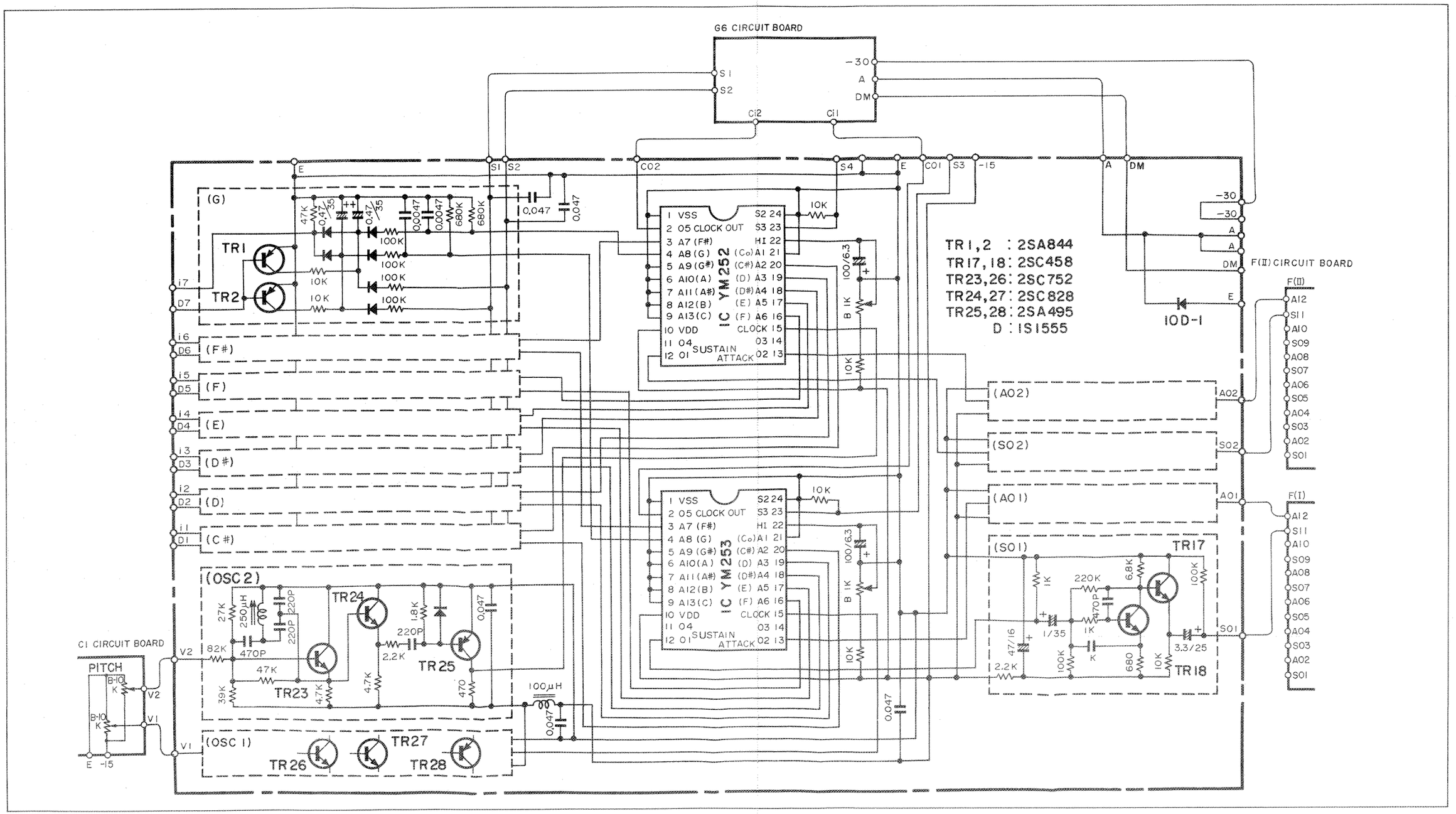

G7 Circuit Board & Wiring

NA80228

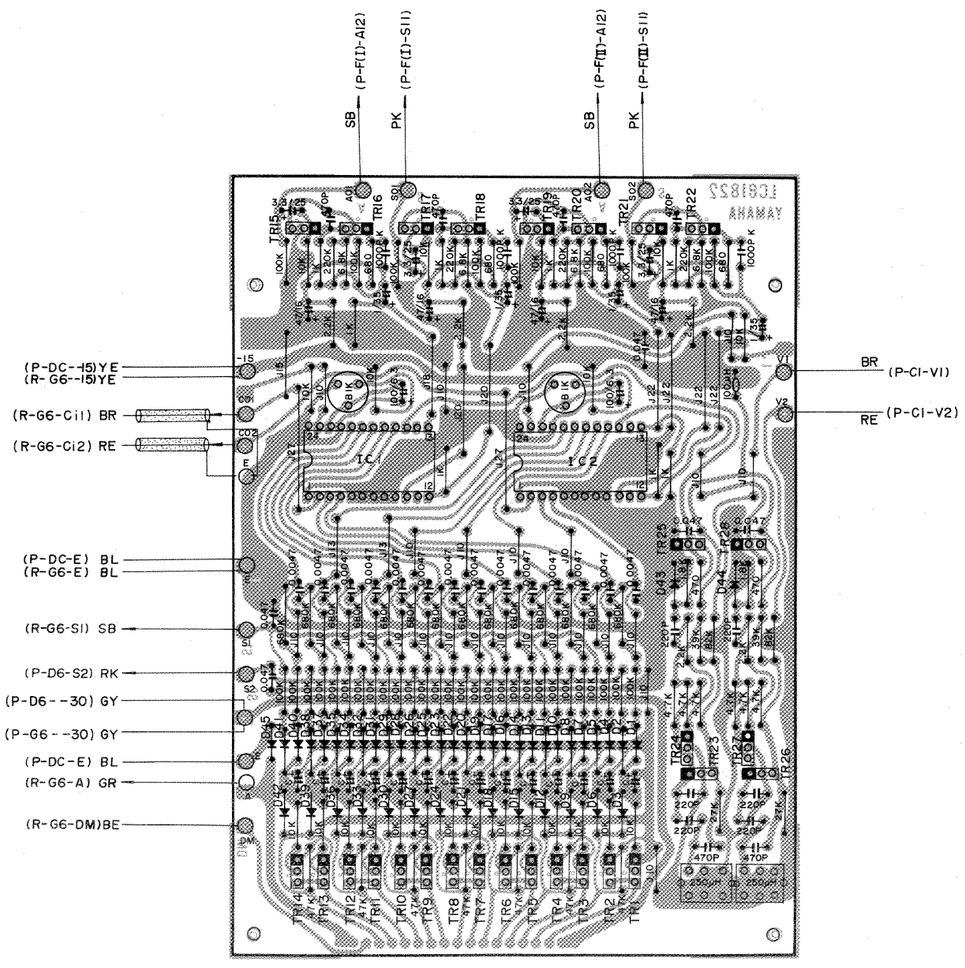

1. Transistor
   Tr1 ～ 14 : 2SA844 (D, E)
   Tr15 ～ 22: 2SC458 LG (C)
   Tr23, 26 : 2SC752 (O), (Y)
   Tr24, 27 : 2SC828 (P)
   Tr25, 28 : 2SA495 (O), (Y)
2. IC
   IC 1 : YM253
   IC2 : YM252
3. Diode
   D1 ～ 44 : 1S1555
   D45 : 10D1
4. Choke coil
   250μH x 2

▼ Adjustment Locations

Channel I attack adjusting pot

Channel II attack adjusting pot

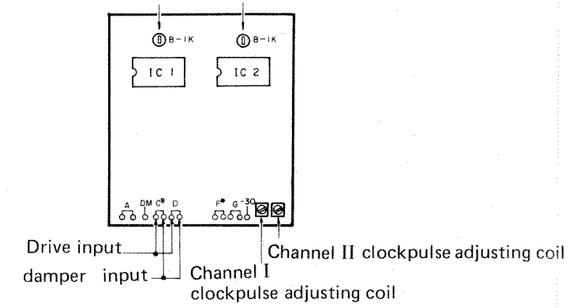

Attack adjusting pot is already adjusted before shipment, therefore do not touch it normally. However, if adjustment is heeded because of IC replacement, etc., procede as follows;

1. Remove wires from output terminals (AO1, SO1, AO2 and SO2). Connect A 1KΩ load resistor from each output terminal to ground, respectively.
2. Apply －5VDC to the drive input (terminal i4) for note name E.
3. Measure the output waveform. Amplitude and waveshape should be as shown in the table below. Adjust respective B－1KΩ adjusting pot as necessary.

(Please recheck pattern of waveform)

Output Terminal	Waveform	Amplitude (P－P)
AO1		350 mV
SO1		950 mV
AO2		300 mV
SO2		950 mV

G7

Terminal description YM253 and YM252

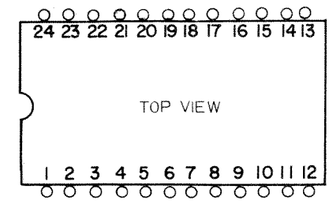

Terminal No.	Terminal name	Description
1	VSS	0 V
2	05 CLOCK OUT	－4.0VClock output terminal
3	A7 (F=)	(OFF) (ON) 0 →－1.5V→ 0
4	A 8 (G)	
5	A 9 (G=)	0 V KEY
6	A10(A)	0 V
7	A11(A=)	0 V
8	A12(B)	0 V
9	A13(C)	0 V
10	VDD	－15V
11	04	0 V
12	01 SUSTAIN	YM253 YM252 Please recheck pattern
13	02 ATTACK	
14	03	0 V
15	CLOCK	－6.0V Clock input terminal
16	A 6 (F)	KEY (OFF)(ON) 0 →－1.5V→0
17	A 5 (E)	
18	A 4 (D=)	
19	A 3 (D)	
20	A 2 (C=)	
21	A 1 (C)	0 V
22	H 1	0 V
23	S 3	0 V
24	S 2	0 V

* Thus, G6 ～ G1 circuit boards are same except for note terminal voltage.

2. G2～G6 Circuit (C2＃～C7)

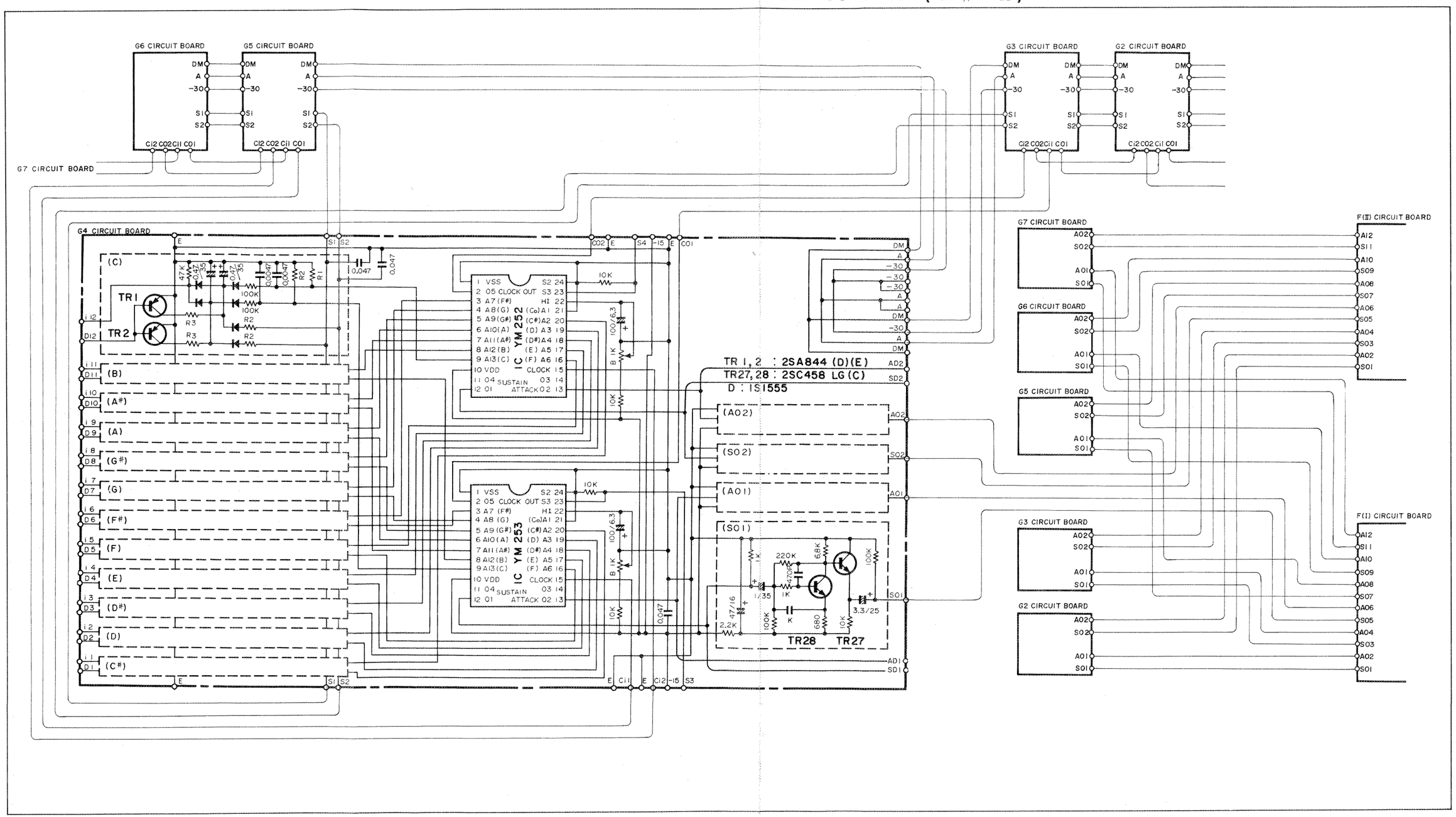

G2～G6 Circuit Board & Wiring

NA80223～7

	A O 1	S O 1
G6	WH(P-F(I)-A10)	GG(P-F(I)-S9)
G5	VI(P-F(I)-A8)	GY(P-F(I)-S7)
G4	GR(P-F(I)-A6)	BE(P-F(I)-S5)
G3	OR(P-F(I)-A4)	YE(P-F(I)-S3)
G2	BR(P-F(I)-A2)	RE(P-F(I)-S1

	A O 2	S O 2
G6	WH(P-F(II)-A10)	GG(P-F(II)-S9)
G5	VI(P-F(II)-A8)	GY(P-F(II)-S7)
G4	GR(P-F(II)-A6)	BE(P-F(II)-S5)
G3	OR(P-F(II)-A4)	YE(P-F(II)-S3)
G2	BR(P-F(II)-A2)	RE(P-F(II)-S1)

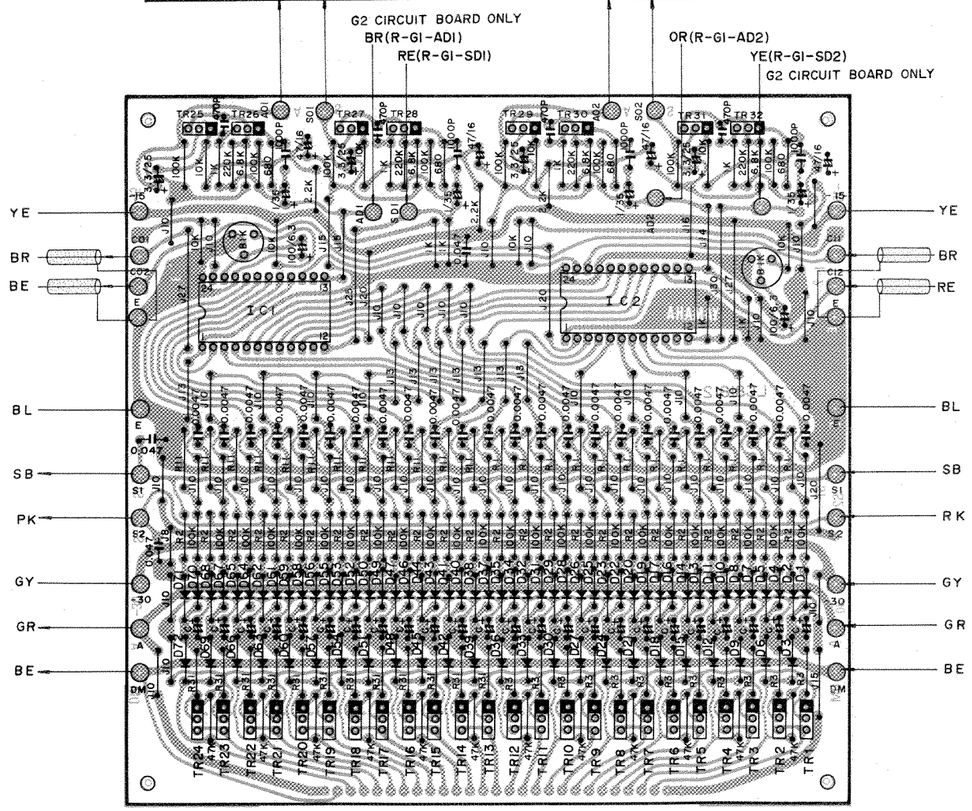

1. Transistor
   Tr1～24 : 2SA844 (D) (E)
   Tr25～32: 2SC458 LG (C)
2. IC
   IC1 : YM253
   IC2 : YM252
3. Diode
   D1～72 : 1S1555
4.

▼ Adjustment Locations

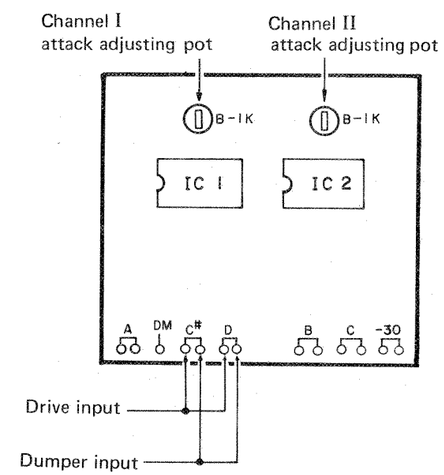

G2 ～ G6

Circuit board	R I	R II	R 2	R 3	R3I
G 2	3.3M	3.3M	270K	47K	47K
G 3	2.2M	2.7M	220K	22K	33K
G 4	1.8M	2.2M	180K	15K	15K
G 5	1.2M	1.5M	150K	12K	12K
G 6	820K	1M	120K	10K	10K

Attack adjusting pot is already adjusted before shipment, therefore do not touch it normally. However, if adjustment is needed because of IC replacement, etc., procede as follows;

1. Remove wires from output terminals (AO1, SO1, AO2 and SO2). Connect a—1KΩ load resistor from each output terminal to ground, respectively.
2. Apply —5VDC to the drive input (terminal i4) for note name E.
3. Measure the output waveform. Amplitude and waveshape should be as shown in the table below. Adjust respective B—1KΩ adjusting pot as necessary.

(Please recheck pattern of waveform)

Output Terminal	Waveform	Amplitude (P—P)
AO1		350 mV
SO1		1100 mV
AO2		300 mV
SO2		1100 mV

3. G1 Circuit (E1～C2)

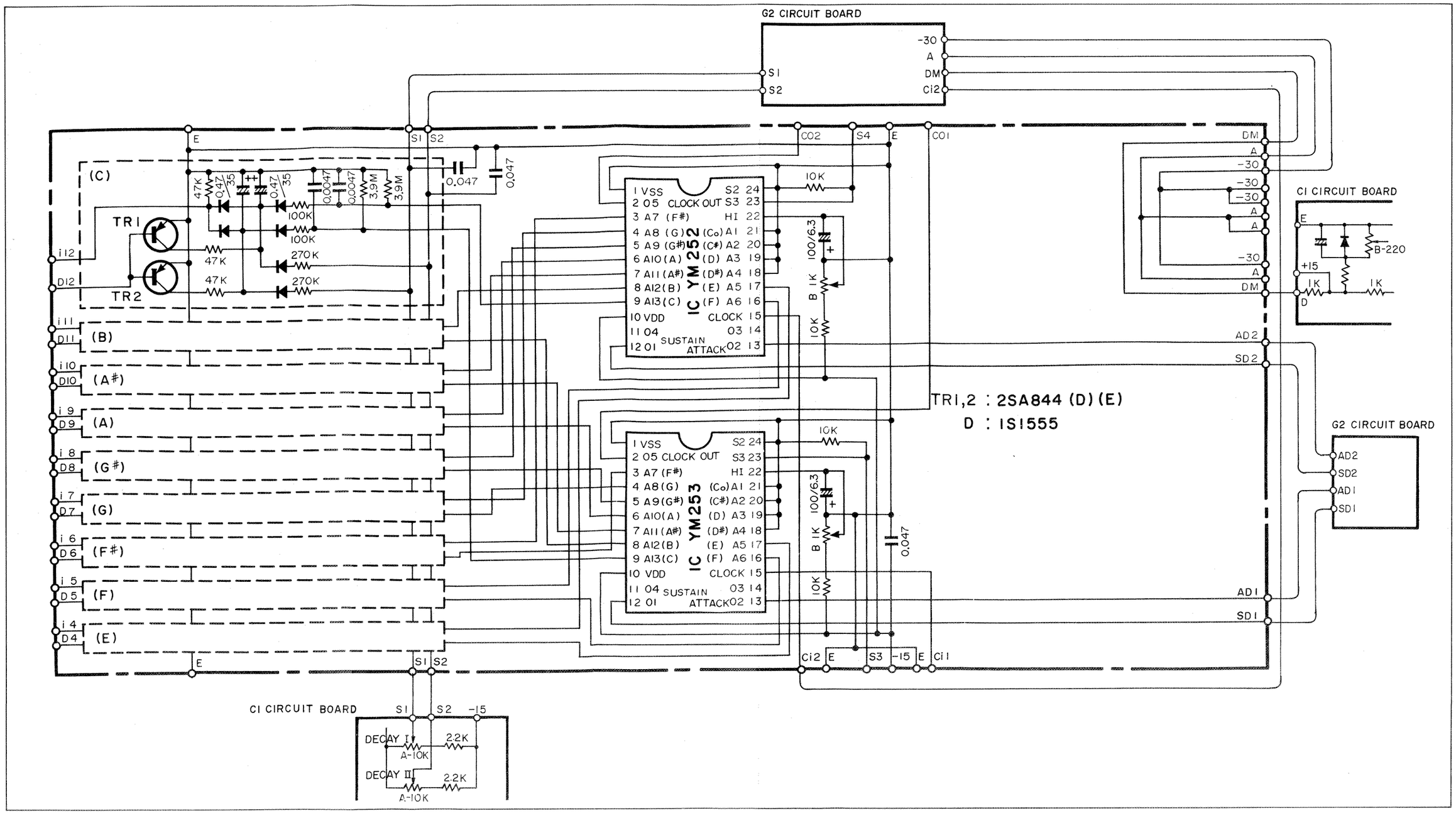

D1 Circuit Board & Wiring

1. Diode
   D1～9 : 1S1555
2. Electrolytic capacitor
   1/50 (± 10%)
3. Key contacts, 9 keys

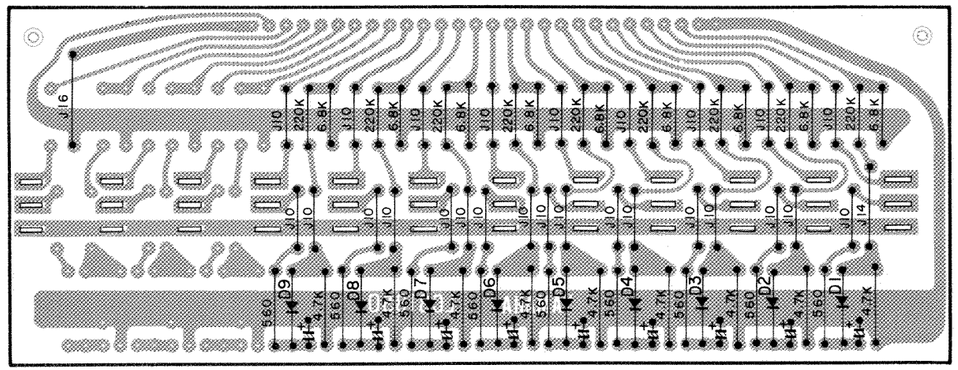

7. F Circuit

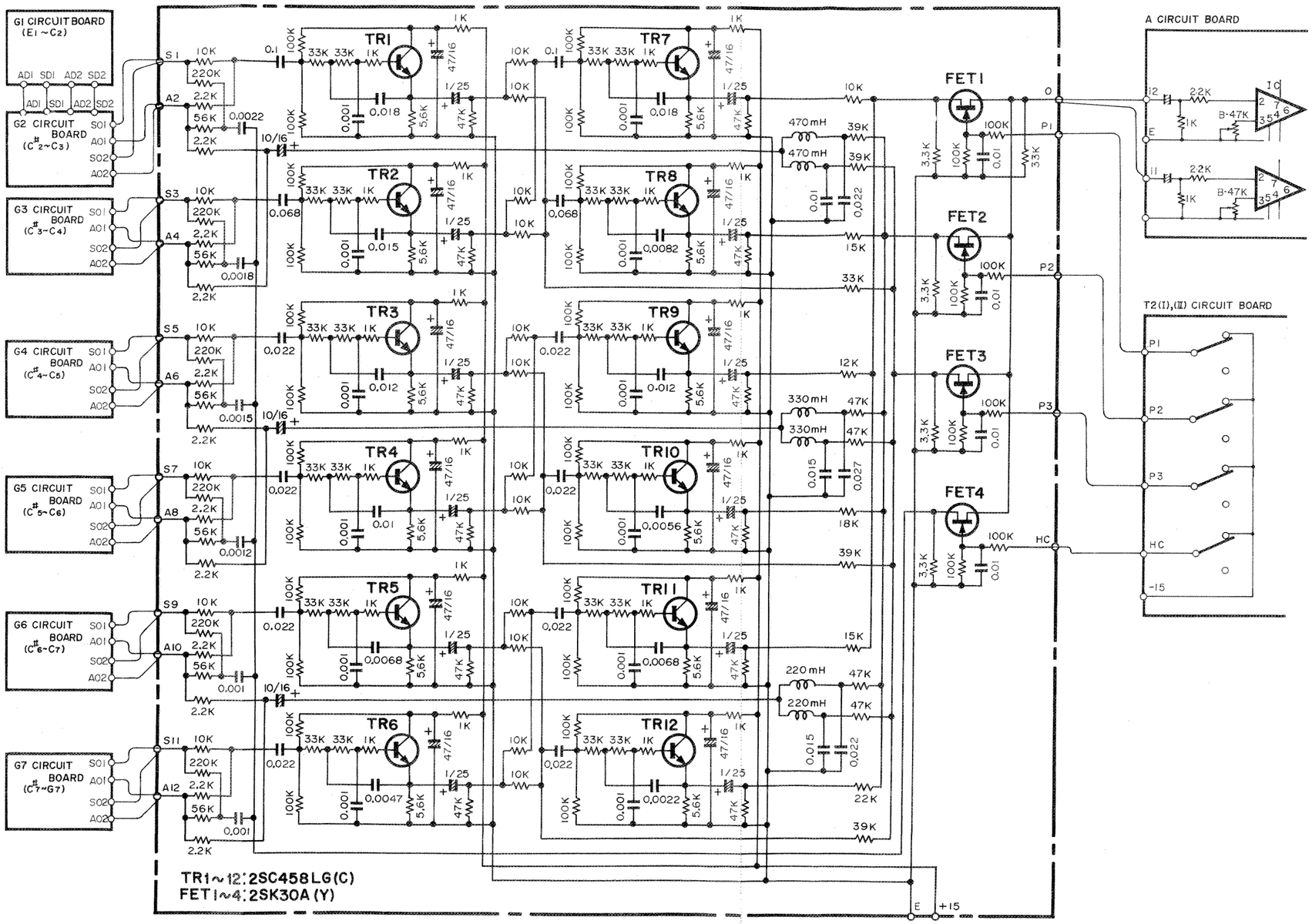
G1 CIRCUIT BOARD (E1~C2)
G2 CIRCUIT BOARD (C#2~C3)
G3 CIRCUIT BOARD (C#3~C4)
G4 CIRCUIT BOARD (C#4~C5)
G5 CIRCUIT BOARD (C#5~C6)
G6 CIRCUIT BOARD (C#6~C7)
G7 CIRCUIT BOARD (C#7~G7)
A CIRCUIT BOARD
T2(I),(II) CIRCUIT BOARD
TR1~12: 2SC458LG(C)
FET1~4: 2SK30A (Y)

F

F Circuit Board & Wiring

NA80230

1. Transistor
   Tr 1 ～ 4 : FET 2SK30A(Y)
   Tr 5 ～ 16 : 2SC458LG(C)
2. Filter coil
   200mH × 2
   330mH × 2
   470mH × 2

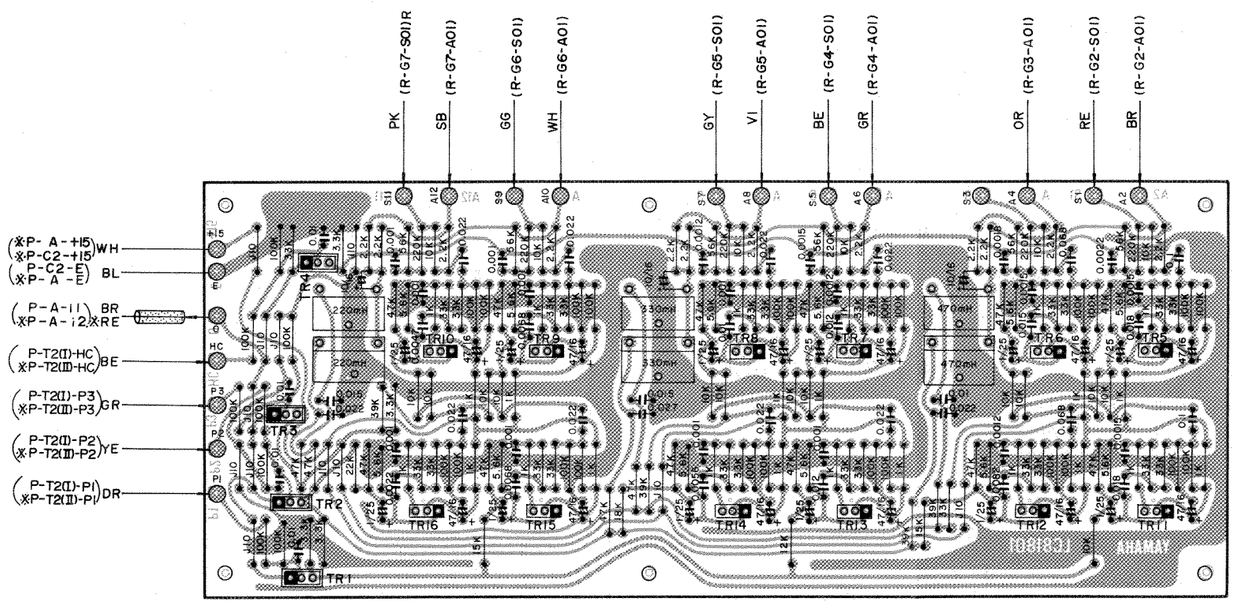

(Each sound tone waveform)
at depressing F4 key : OUTPUT (0 terminal)

Channel I

(PIANO 1)

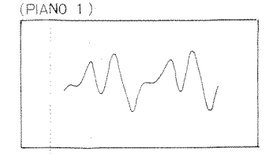

(PIANO 2)

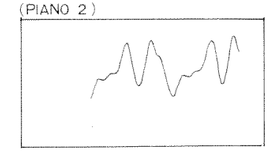

(PIANO 3)

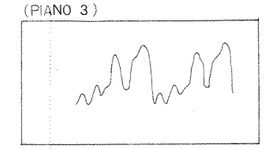

(HARPSICHORD)

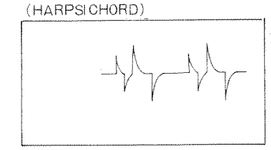

Channel II

(PIANO 1)

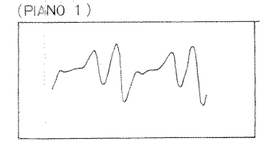

(PIANO 2)

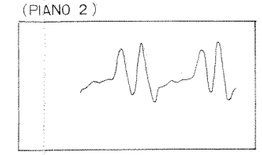

(PIANO 3)

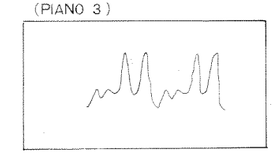

(HARPSICHORD)

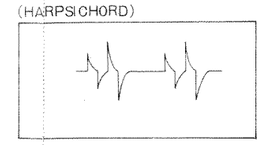

8. A Circuit

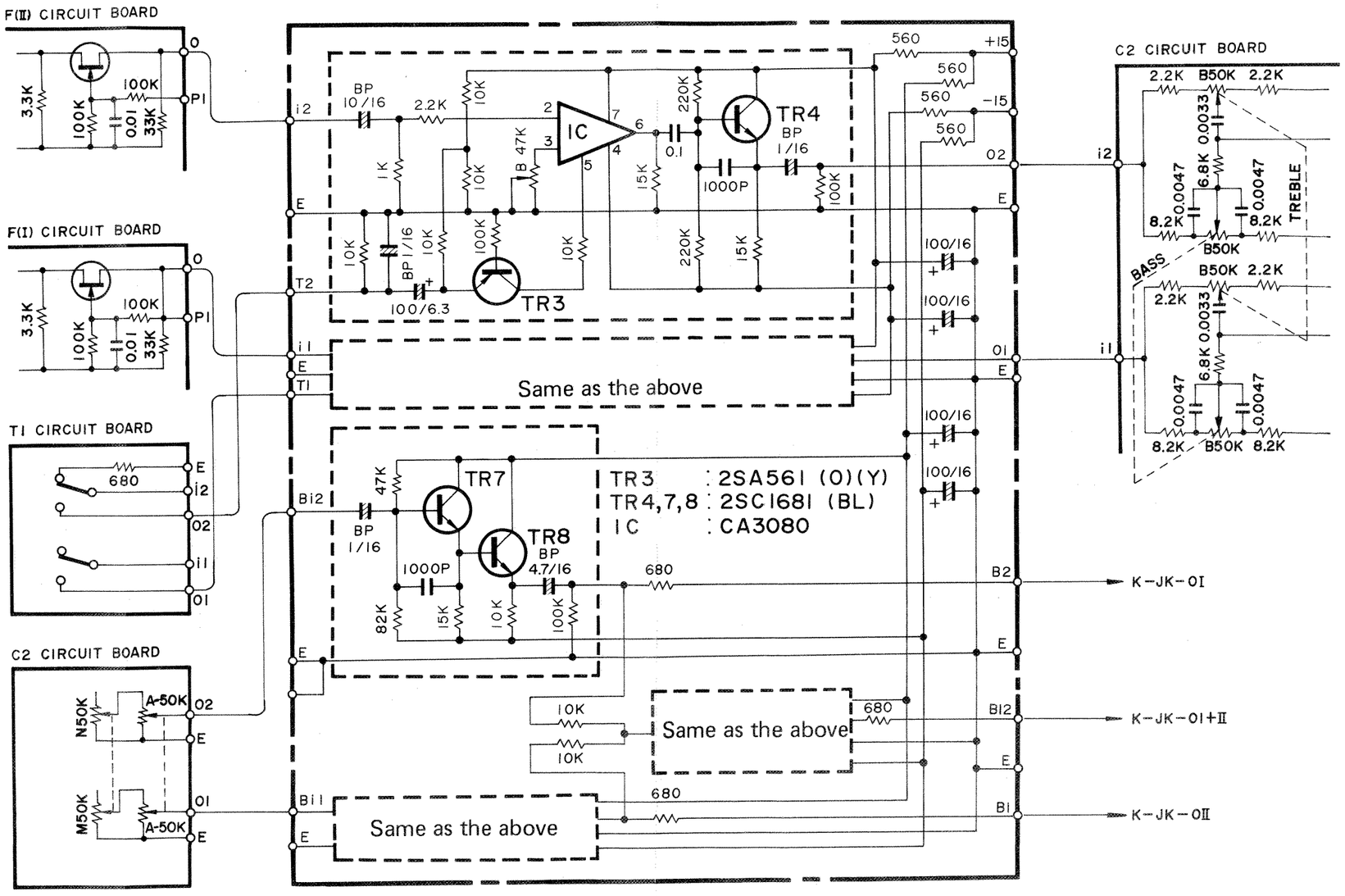
F(II) CIRCUIT BOARD
F(I) CIRCUIT BOARD
T1 CIRCUIT BOARD
C2 CIRCUIT BOARD
IC
TR3
TR4
TR7
TR8
TR3 : 2SA561 (O)(Y)
TR4,7,8 : 2SC1681 (BL)
IC : CA3080
Same as the above
Same as the above
Same as the above
C2 CIRCUIT BOARD
BASS
TREBLE
K-JK-OI
K-JK-OI+II
K-JK-OII

A

A Circuit Board & Wiring

NA80214

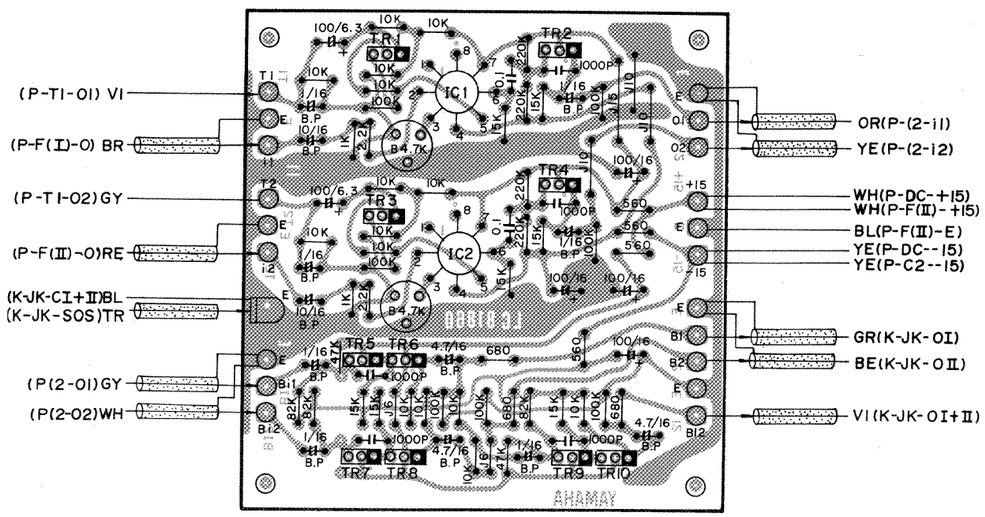

1. Transistor
   Tr1, 3 : 2SA561 (O) (Y)
   Tr2, 4, 5, 6:2SC1681 (BL)
2. IC
   IC1, 2 : CA3080

▼ Adjustment Locations

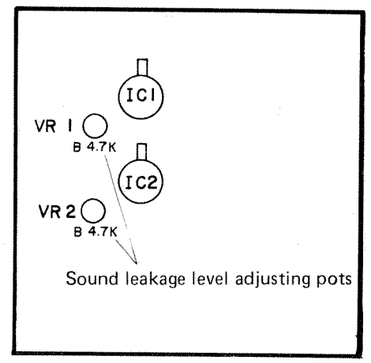

9. C1 Circuit

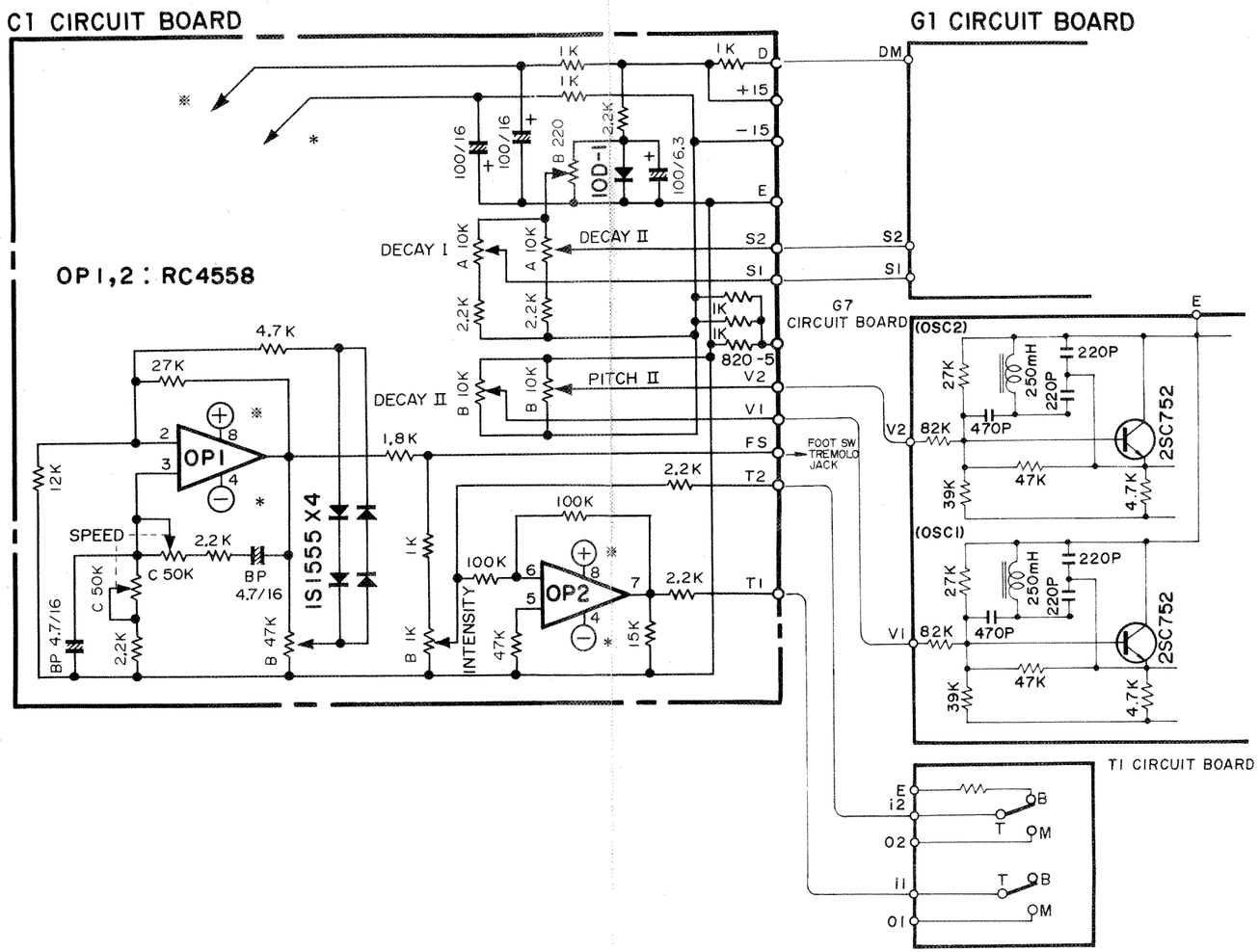
C1 CIRCUIT BOARD
G1 CIRCUIT BOARD
OP1,2 : RC4558
G7 CIRCUIT BOARD
T1 CIRCUIT BOARD
FOOT SW TREMOLO JACK
IS1555 X4
OP1
OP2
2SC752
(OSC2)
(OSC1)
DECAY I
DECAY II
PITCH II
SPEED
INTENSITY
D
+15
-15
E
S2
S1
V2
V1
FS
T2
T1
DM
820 -5
4.7K
27K
12K
1K
2.2K
100K
1.8K
47K
15K
10K
C 50K
BP 4.7/16
100/16
100/6.3
220
250mH
220P
470P
82K
39K
i2
o2
i1
o1
B
T
M

C1

C1 Circuit Board & Wiring

NA80215

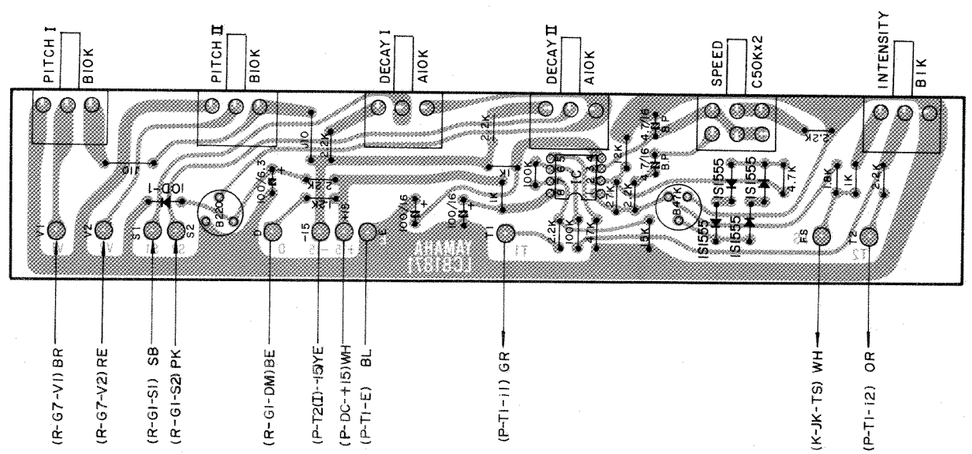

1. IC
   RC 4558
2. Electrolytic capacitors 100/6.3, 100/16x2 are firmly attached.

1. Variation range of PITCH 1, 2 is approx. 437 – 453 Hz.
2. Variation range of TREMOLO SPEED is approx. 0.5 – 11 Hz.
3. Modulation degree of TREMOLO INTENSITY is approx. 70% at maximum.

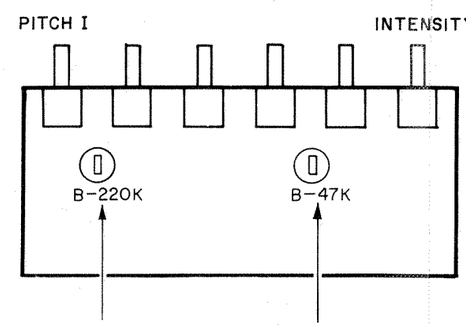

Adjustment is made such that, when pots of DECAY I, II are set at minimum, +0.1V will be present at S1 and S2 terminals and when they are set at maximum, –11V will be present.

Oscillation voltage adjusting pot
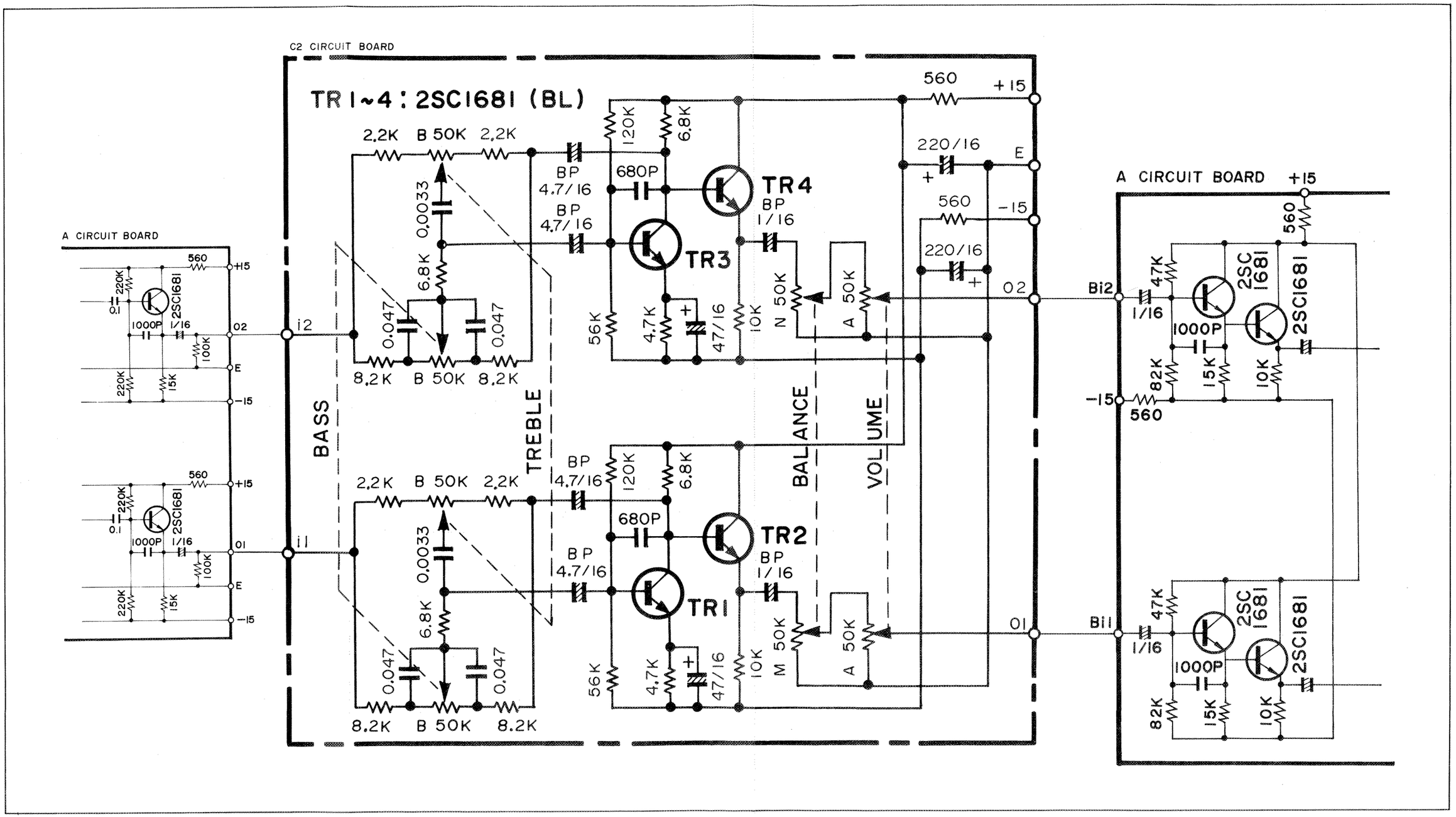
10. C2 Circuit