Setting Name:

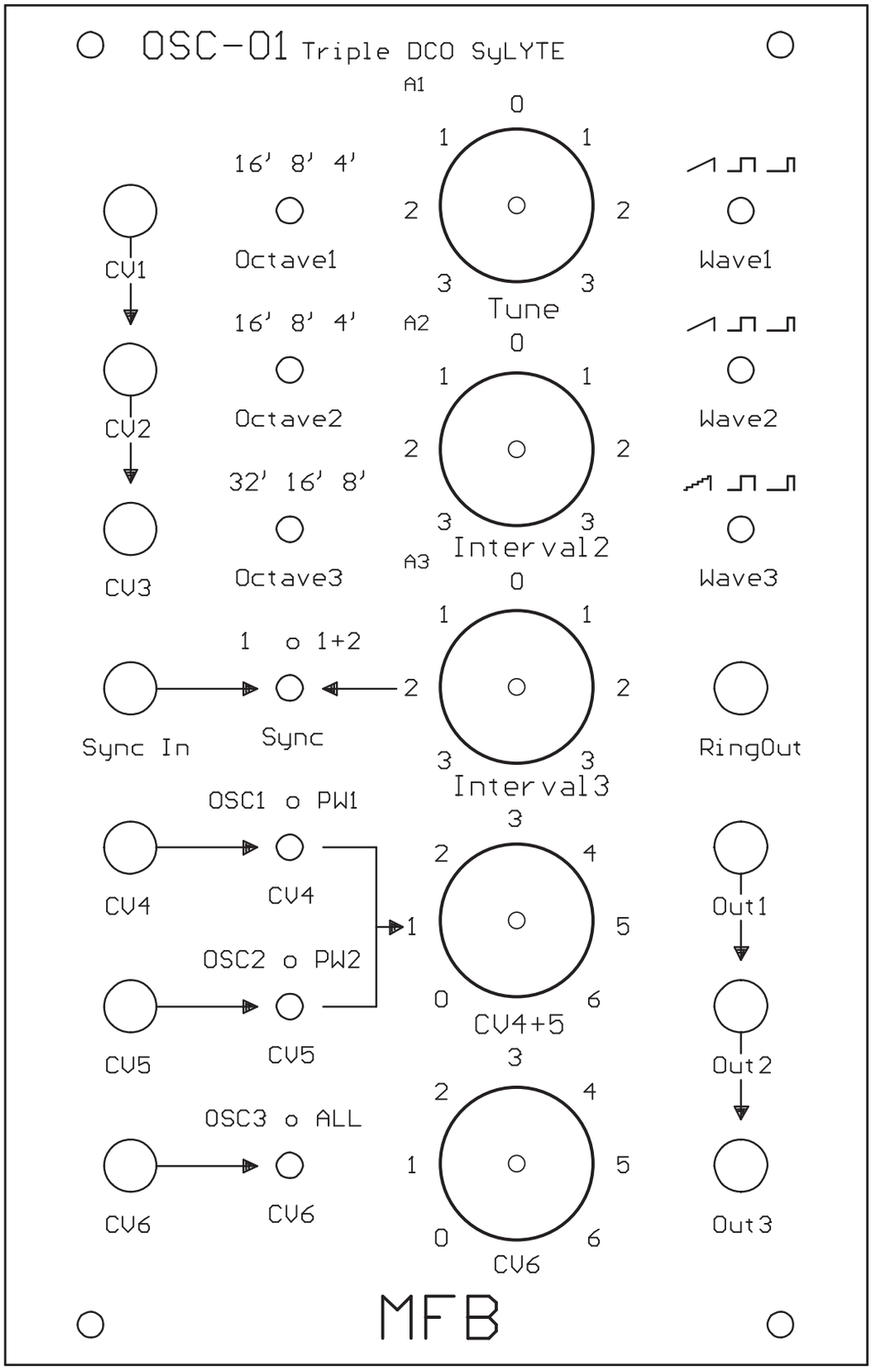

Category:

Note: